AQUA PURA

CATALOGUE

RETENTION TANKS
WASTEWATER TREATMENT SYSTEMS AND PLANTS

AQUA PURA

CATALOGUE

RETENTION TANKS
WASTEWATER TREATMENT SYSTEMS AND PLANTS

INDEX

INTRODUCTION	**4**
Retention tanks	
1.1 Above ground installation	
CHL + CHO	**5**
CP + CPZ	**6**
CV + PA	**7**
CB + BC	**8**
SSC + JAR	**9**
1.2 Underground installation	
CU + CHU	**10**
MODULAR TANKS	**11**
RAINWATER HARVESTING SYSTEMS	**12**
RAIN SYSTEM	**16**
WASTEWATER	**19**
2.1 CIVIL WASTEWATER TREATMENT	
Primary treatment	
DG / DG PRO	**20**
ST	**22**
IMHOFF	**24**
Secondary treatment with drain to watercourses	
FAN	**26**
FAN ERU	**28**
FAE	**30**
FAE ERU	**32**
FBC	**34**
FOT	**36**
FPAI	**38**
Secondary treatment with drain to the ground	
FPAI SUPERIOR	**40**
SUBI	**42**
DRENASUB	**44**
FITO	**46**
EVAPO	**48**
Data sheet for wastewater plant	**50**

2.2 TREATMENT OF WASTEWATER FROM COMMERCIAL ACTIVITIES	**52**
2.3 RAINWATER TREATMENT	
Covered or uncovered paved areas: primary treatment	
DIS	**54**
OIL	**56**
OIL-C	**58**
Covered or uncovered paved areas: complete systems with drain into public sewage system	
EPRAIN-C	**60**
EPRAIN ACC	**62**
Covered or uncovered paved areas: complete systems with drain into watercourses	
EPRAIN-C F.C.	**64**
EPRAIN ACC F.C.	**66**
Data sheet for rainwater treatment plants	**70**
LAMINATION	**72**
2.4 CAR WASHING WATER TREATMENT	
WASH PF	**74**
WASH T3	**76**
WASH T4	**78**
Data sheet for car wash plants	**80**
TECHNICAL INFORMATION	
Advantages of the Plasto line	**84**
Warranty Conditions for the Plasto line	**84**
Installation and maintenance notes for the Plasto line	**85**
General Warnings and cautions for handling and underground installation of modular tanks	**86**
Instructions for the correct underground placement of all Plasto underground tanks	**88**
Instructions for installation in series	**89**
System solutions according to the location of the final discharge point	**90**
Population Equivalent: definition and calculation	**91**
Table of tank chemical resistance to some fluids and reagents	**92**
ACCESSORIES and SPARE PARTS	**93**
GENERAL TERMS AND CONDITIONS OF SALE	**98**

INTRODUCTION

FOUNDED IN 1965 IN VIGODARZERE (PD), ELBI HAS ALWAYS BEEN IDENTIFIED FOR ITS VARIED RANGE AND INTERNATIONAL VOCATION. THE COMPANY HAS BEEN OPERATING FOR 50 YEARS IN THE FIELD OF THERMO-HYDRAULICS, GRADUALLY ACHIEVING A SOLID REPUTATION AND STANDING IN THE MAJOR WORLD MARKETS.

STORAGE OF LIQUIDS AND PURIFICATION OF WASTEWATER

Elbi has designed a dedicated line of polyethylene products to contain liquids and for water purification. This new line comes from the long experience of designing and manufacturing tanks for the storage of food and chemical liquids and rainwater recovery systems.

The range offers a wide choice of models designed to meet the various installation requirements in civil wastewater treatment plants, water distribution systems and the storage of liquids.

Pictograms

- For drinking water
- Not for drinking water
- Handling by forklift
- Model for underground only
- Above ground only
- Suitable for chemical substances
- Recyclable polyethylene

CHL

RETENTION TANKS

FOR INSTALLATION ABOVE GROUND

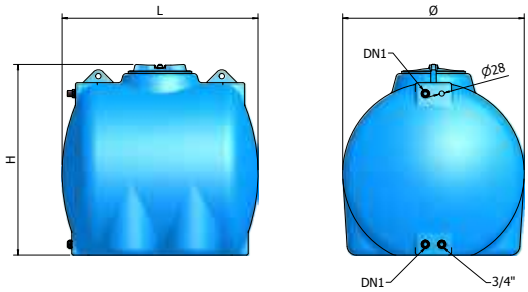

MODEL	CODE	CAPACITY	DIAMETER Ø	HEIGHT H	SIDE S	DN1	HATCH COVER Ø	Notes
		litres	mm	mm	mm	Ø	mm	
CHL- 300	A610051	300	750	775	790	1"	200	
CHL- 500	A610055	500	850	900	980	1"	300	
CHL- 750	A610059	750	1000	1050	1080	1" 1/4	300	
CHL-1000	A610062	1000	1100	1155	1150	1" 1/4	400	
CHL-1500	A610067	1500	1250	1305	1350	1" 1/2	400	
CHL-2000	A610070	2000	1400	1455	1430	1" 1/2	400	
CHL-3000	A610074	3000	1550	1605	1750	1" 1/2	400	
CHL-5000	A610080	5000	1820	1875	2080	2"	400	

Suitable to contain chemical substances. (See p. 92 Chemical Resistance Table)

For drinking water

For use above ground

Also available without holes.
Colours available:

BLUE	Standard
GREY	On request
TERRACOTTA	On request

WARRANTY: 2 YEARS

CHO

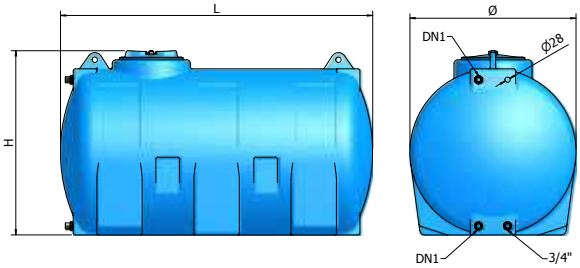

MODEL	CODE	CAPACITY	DIAMETER Ø	HEIGHT H	SIDE S	DN1	HATCH COVER Ø	Notes
		litres	mm	mm	mm	Ø	mm	
CHO- 300	A580051	300	625	705	1100	1"	200	
CHO- 500	A580055	500	720	800	1500	1"	300	
CHO- 750	A580059	750	820	900	1580	1" 1/4	300	
CHO-1000	A580062	1000	915	995	1720	1" 1/4	300	
CHO-1500	A580067	1500	1155	1255	1630	1" 1/2	400	
CHO-2000	A580070	2000	1300	1400	1700	1" 1/2	400	
CHO-3000	A580074	3000	1450	1550	2000	1" 1/2	400	
CHO-5000	A580080	5000	1740	1840	2310	2"	400	

Suitable to contain chemical substances. (See p. 92 Chemical Resistance Table)

For drinking water

For use above ground

Also available without holes.
Colours available:

BLUE	Standard
GREY	On request
TERRACOTTA	On request

WARRANTY: 2 YEARS

CP

RETENTION TANKS

FOR INSTALLATION ABOVE GROUND

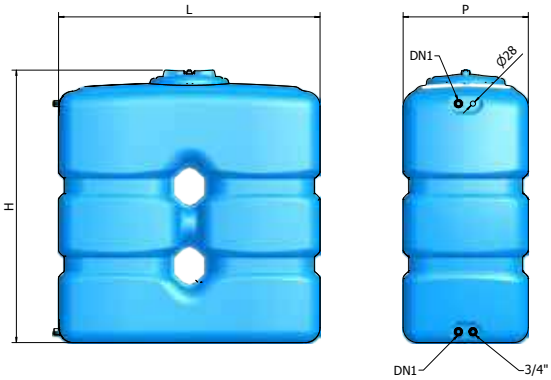

MODEL	CODE	CAPACITY	HEIGHT H	LENGTH X WIDTH DXL	DN1	HATCH COVER Ø	Notes
		litres	mm	mm	Ø	mm	
CP- 500	1720435	500	1060	700 x 840	1"	300	
CP- 800	1720439	800	1320	670 x 1290	1"	300	
CP-1000	1720442	1000	1420	670 x 1400	1"	300	
CPN-2000	A640070	2000	1900	695 x 2050	1" 1/2	400	

Suitable to contain chemical substances. (See p. 92 Chemical Resistance Table)

For drinking water

For use above ground

Also available without holes.
Colours available:

BLUE	Standard
GREY	On request
TERRACOTTA	On request

WARRANTY: 2 YEARS

CPZ

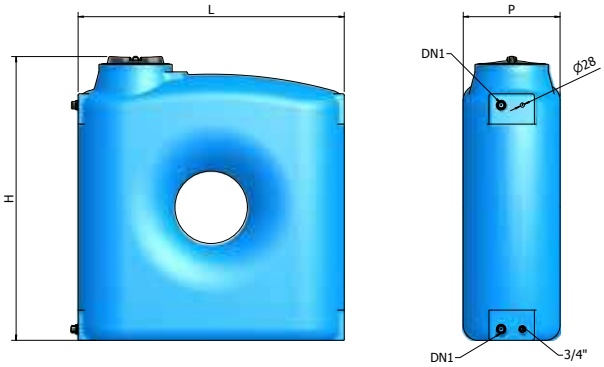

MODEL	CODE	CAPACITY	HEIGHT H	LENGTH X WIDTH DXL	DN1	HATCH COVER Ø	Notes
		litres	mm	mm	Ø	mm	
CPZ 1500	A620067	1500	1860	640 x 1760	1" 1/2	300	
CPZ 2000	A620070	2000	2050	695 x 1910	1" 1/2	300	

Suitable to contain chemical substances. (See p. 92 Chemical Resistance Table)

For drinking water

For use above ground

Also available without holes.
Colours available:

BLUE	Standard
GREY	On request
TERRACOTTA	On request

WARRANTY: 2 YEARS

CV

RETENTION TANKS

FOR INSTALLATION ABOVE GROUND

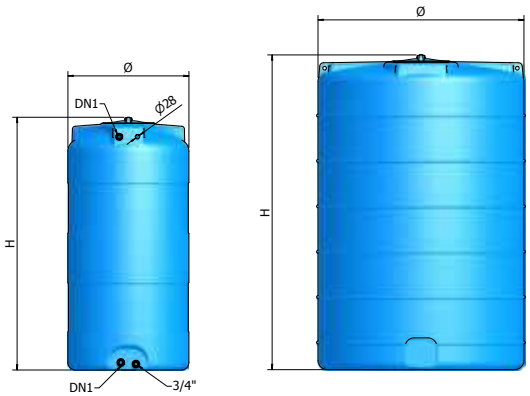

MODEL	CODE	CAPACITY	DIAMETER Ø	HEIGHT H	DN1	HATCH COVER Ø	Notes
		litres	mm	mm	Ø	mm	
CV- 300	A510051	300	630	1170	1"	300	
CV- 500	A510055	500	700	1460	1"	300	
CV- 750	A510059	750	800	1680	1" 1/4	300	
CV- 1000	A510062	1000	800	2180	1" 1/4	300	
CV- 1500	A510067	1500	1060	1920	1" 1/2	300	
CV- 2000	A510070	2000	1200	2015	1" 1/2	400	
CV- 3000	A510074	3000	1470	2050	1" 1/2	400	
CV- 5000	A510080	5000	1790	2210	2"	400	
CV-10000 (•)	A510092	10000	2300	2650	–	600	
CV-13000 (•)	A510095	13000	2300	3400	–	600	

Suitable to contain chemical substances. (See p. 92 Chemical Resistance Table)

For drinking water

For use above ground

Also available without holes.
Colours available:

BLUE	Standard
GREY	On request
TERRACOTTA	On request

(•) Tanks exclusively produced in the factory of Limena (PD)

WARRANTY: 2 YEARS

PA

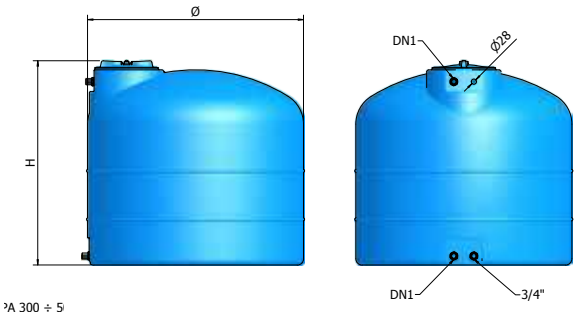

MODEL	CODE	CAPACITY	DIAMETER Ø	HEIGHT H	DN1	HATCH COVER Ø	Notes
		litres	mm	mm	Ø	mm	
PA- 300	A560051	300	770	820	1"	200	
PA- 500	A560055	500	915	950	1"	200	
PA- 750	A560059	750	1060	1045	1" 1/4	200	
PA-1000	A560062	1000	1205	1125	1" 1/4	300	
PA-1500	A560067	1500	1300	1350	1" 1/2	300	
PA-2000	A560070	2000	1440	1460	1" 1/2	400	
PA-3000	A560074	3000	1735	1570	1" 1/2	400	
PA-5000	A560080	5000	2020	1885	2"	400	

Suitable to contain chemical substances. (See p. 92 Chemical Resistance Table)

For drinking water

For use above ground

Also available without holes.
Colours available:

BLUE	Standard
GREY	On request
TERRACOTTA	On request

WARRANTY: 2 YEARS

CB

RETENTION TANKS

FOR INSTALLATION ABOVE GROUND

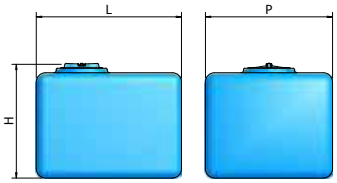

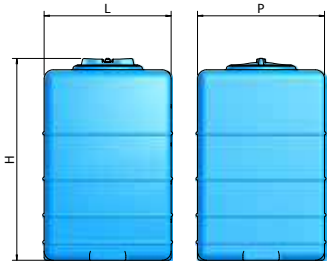

MODEL	CODE	CAPACITY	HEIGHT H	LENGTH X WIDTH DXL	HATCH COVER Ø	Notes
		litres	mm	mm	mm	
CB-100	1720624	100	575	500 x 500	200	
CB-200	1720629	200	625	600 x 700	200	
CB-300	1720633	300	655	700 x 800	200	
CB-500	A530055 00010	500	770	716 x 1066	300	
CBA-500	A530056 00010	500	1120	716 x 716	300	

Suitable to contain chemical substances. (See p. 92 Chemical Resistance Table)

For drinking water

For use above ground

Colours available:

BLUE	Standard
GREY	On request
TERRACOTTA	On request

WARRANTY: 2 YEARS

BC

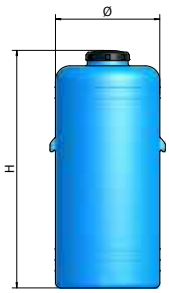

MODEL	CODE	CAPACITY	DIAMETER Ø	HEIGHT H	HATCH COVER Ø	Notes
		litres	mm	mm	mm	
BC- 60	A570035	60	380	650	140	
BC-100	A570038	100	460	710	140	
BC-150	A570043	150	460	1025	140	
BC-200	A570047	200	575	895	215	
BC-250	A570049	250	575	1090	215	
BC-300	A570051	300	575	1290	215	

Suitable to contain chemical substances. (See p. 92 Chemical Resistance Table)

For drinking water

For use above ground

WARRANTY: 2 YEARS

SSC

RETENTION TANKS

FOR INSTALLATION ABOVE GROUND

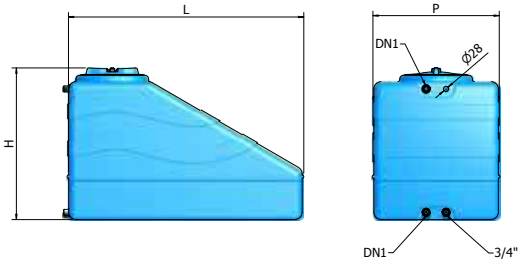

MODEL	CODE	CAPACITY	DIAMETER Ø	LENGTH X WIDTH DXL	DN1	HATCH COVER Ø	Notes
		litres	mm	mm	Ø	mm	
SSC 300	A600051	300	680	610 x 1150	1"	300	
SSC 500	A600055	500	850	700 x 1300	1"	300	

Suitable to contain chemical substances. (See p. 92 Chemical Resistance Table)

For drinking water

For use above ground

Also available without holes.

WARRANTY: 2 YEARS

JAR ORCIO

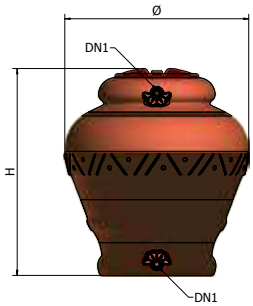

MODEL	CODE	CAPACITY	DIAMETER Ø	HEIGHT H	DN1	HATCH COVER Ø	Notes
		litres	mm	mm	Ø	mm	
JAR- 300 TC	A5H0051	300	800	1080	1"	400	
JAR- 500 TC	A5H0055	518	1020	1140	1"	400	
JAR- 750 TC	A5H0059	750	1115	1250	1"	400	
JAR-1000 TC	A5H0062	1020	1190	1600	1"	400	

Suitable to contain chemical substances. (See p. 92 Chemical Resistance Table)

For drinking water

For use above ground

Also available without holes.

WARRANTY: 2 YEARS

CU

RETENTION TANKS

FOR UNDERGROUND INSTALLATION

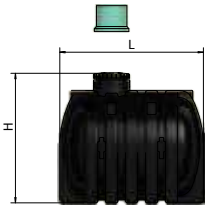

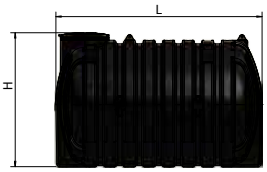

MODEL	CODE	CAPACITY	DIAMETER Ø	HEIGHT H	SIDE S	HATCH COVER Ø	Notes
		litres	mm	mm	mm	mm	
CU-3000	1720551	3000	1585	1870	1920	500	
CU-5000	1720557	5000	1860	2150	2380	500	
CU-10000 (•)	1720563	10000	2130	2225	3410	700	

(•) Tank produced in metallocene, raw material with high elasticity.
Exclusively produced in the factory of Limena (PD)

Suitable to contain chemical substances. (See p. 92 Chemical Resistance Table)

For drinking water

Model for underground

Handling by forklift

WARRANTY: 2 YEARS

Extension on request.

CHU

MODEL	CODE	CAPACITY	DIAMETER Ø	HEIGHT H	SIDE S	HATCH COVER Ø	Notes
		litres	mm	mm	mm	mm	
CHU-1000	A590062	1000	915	1415	1720	300	
CHU-2000	A590070	2000	1300	1800	1700	400	

Suitable to contain chemical substances. (See p. 92 Chemical Resistance Table)

For drinking water

Model for underground

Handling by forklift

WARRANTY: 2 YEARS

Extension provided

MODULAR TANKS

RETENTION TANKS

FOR UNDERGROUND INSTALLATION

MODEL	CODE	CAPACITY	DIAMETER Ø	HEIGHT H	SIDE S	HATCH COVER Ø	HATCH	Notes
		litres	mm	mm	mm	mm	n°	
MU-15000	A630015	15000	2100	2200	5370	700	2	
MU-20000	A630020	20000	2100	2200	7000	700	3	
MU-25000	A630025	25000	2100	2200	8650	700	3	
MU-30000	A630030	30000	2100	2200	10250	700	4	
MU-35000	A630035	35000	2100	2200	11900	700	4	
MU-40000	A630040	40000	2100	2200	13500	700	5	

Suitable for chemical substances

For drinking water

Model for underground only

WARRANTY: 2 YEARS

For storage of chemicals, see the table of tank chemical resistance to some fluids and reagents (page 92)

ELBI guarantees the resistance of PLASTO tanks to liquids declared suitable (R) in the table of tank resistance.

The maintaining of the characteristics of the liquids contained inside should be checked by and is the responsibility of the user.

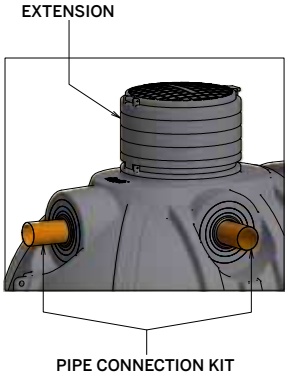

ACCESSORIES AVAILABLE

Code	Description
A5G0092 00002	EXTENSION D.700 - H.450
L3G0110 00002	PVC PIPE CONNECTION KIT D.110
L3G0125 00002	PVC PIPE CONNECTION KIT D.125
L3G0160 00002	PVC PIPE CONNECTION KIT D.160
L3G0200 00002	PVC PIPE CONNECTION KIT D.200
L3G0250 00002	PVC PIPE CONNECTION KIT D.250
L3G0315 00002	PVC PIPE CONNECTION KIT D.315
L3G0400 00002	PVC PIPE CONNECTION KIT D.400

RAINWATER HARVESTING SYSTEMS

A PRECIOUS RESOURCE

Over 97% of the total 1.4 million km^3 of water on Earth is seawater, which cannot be used for human consumption. The remaining 3% of the freshwater is mostly composed of ice (concentrated at the Poles).
The available part for human consumption is only 0.3%; this percentage is progressively reducing due both to the polluting substances being drained into the water and to the irregular rainfall, always less frequent and often dangerously overabundant, which do not enable an adequate supply by the water main.

WHY SHOULD RAINWATER BE RECOVERED?

The use of rainwater is, therefore, a precious contribution to reducing waste of drinking water. It encourages more careful consumption and awareness and leads to considerable cost savings (up to 50%).
Rainwater is particularly indicated in the following uses:

- for the washing machine and household cleaning: rainwater does not stimulate the formation of limescale; the use of rainwater reduces consumption of limescale removers and, thanks to its best cleaning action, also reduces the use of detergents (about 50%);
- for gardening: rainwater used to water plants and flowers stimulates optimal absorption of minerals;
- for the WC: rainwater does not stimulate the formation of lime scale.

PRO-CAPITA CONSUMPTION OF DRINKING WATER IN DOMESTIC USE

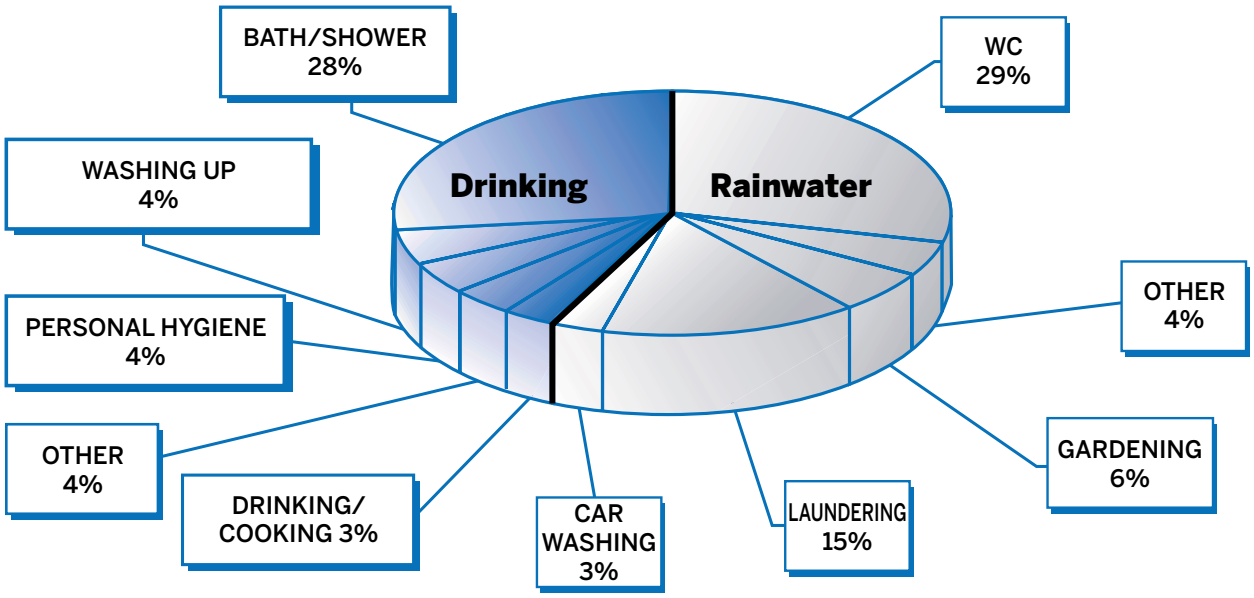

OVER HALF
THE DAILY DOMESTIC
CONSUMPTION OF DRINKING WATER
CAN BE REPLACED WITH
RAINWATER

TANK SIZING

Use the following information to calculate the proper size of the tank:

RAINWATER YIELD (R)

Projected roof surface (S)
The projected roof surface is equal to the building's base, regardless of the shape and roof inclination.

Precipitation values (Vp)
Local precipitation value indicates the annual rain quantity. Such information is usually available from the local authority or at the nearest meteorological station. (average: 1,000 l/m^2)

Roof cover value (Vt)

Roof manufacturing material	Value
Tiles in clay, terracotta and glazed	0,9
Roof in cement or slate	0,8
Flat roofs with gravel	0,6
Green roofs	0,5

$$\mathbf{R = S}\ (m^2)\ \mathbf{x\ Vp}\ (litres/m^2)\ \mathbf{x\ Vt}$$

WATER REQUIREMENTS (FI)

Utility	Average requirement per year		No.		WATER REQUIREMENTS (FI)
WC	9.000 litres	x	..... people	=	..... +
Washing machine	5.000 litres	x	..... people	=	..... +
Household cleaning	1.000 litres	x	..... people	=	..... +
Gardening	450 litres/m^2	x	..... m^2	=	..... +
Other	.....	x	.....	=	..... =
TOTAL WATER REQUIREMENTS (FI)					**Litres**

Values to consider for large systems:
- School = 1000 l/person
- Office = 1500 l/person

The calculation factor **(FC)** is the smallest value of the rainwater yield **(R)** and the water requirement **(Fi)**.
The constant (K) is 0.0625.
The minimum volume of the tank **(V)** then will be:

$$\mathbf{V = FC}\ (litres)\ \mathbf{x\ K}$$

Before installing the rainwater recovery system, we recommend you to contact the local council or local authority to find out the local standards in force (where present) concerning the treatment of rainwater for domestic use (use of debacterising systems, rainwater separation from drinking water, etc.).

DIAGRAM OF SYSTEM WITH "S" OR "F" CONTROL UNIT

OPERATION:

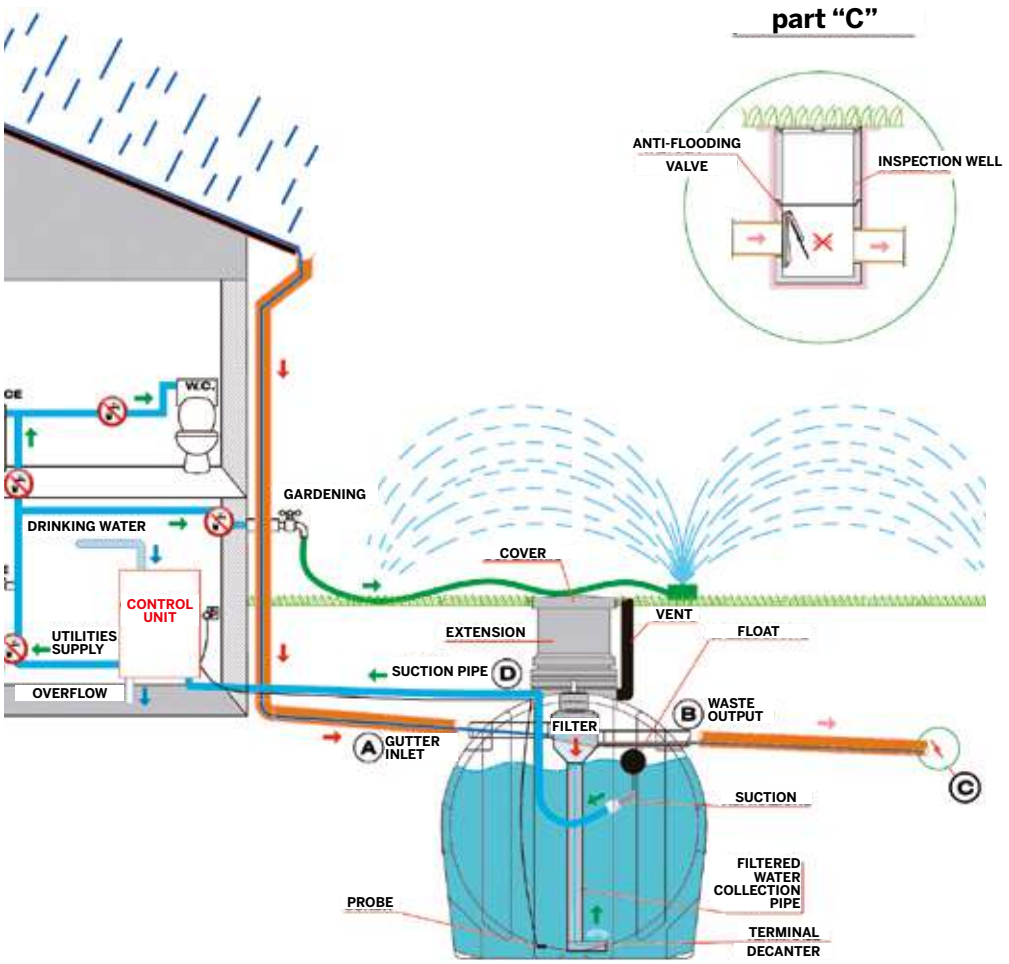

The purpose of the system is to recover rainwater from using it again for certain household utilities (WC, washing machine, irrigation, cleaning, etc.). It is composed of an underground tank, a filtering system and a control unit.
The water is collected by gutters and, via a pipe, transferred towards the filter inside the tank. The filter is located in a tilted position so that the filtered residue is brought towards the drainage pipe.
The filter is used to separate the water from the dirt and to direct the water inside of the tank using a pipe (settling terminal) whose end part is turned upwards to avoid creating turbulence and not to remove any stored sediment lying on the bottom of the tank. The water intake occurs at 15 cm under the water level using a flexible pipe with a float inside the tank to take out the purest water. A control unit composed of an electric box and a built-in pump controls the entire system from inside the home.
The control unit also has the task of controlling the inflow of drinking water when the rainwater reserve in the tank is used up.

A natural balance

- Oxygenated environment
- Cool temperature
- No light

These three conditions are necessary for the good functioning of the rainwater collection system.
Inside the underground tank, the temperature is kept cool and free from sudden temperature changes. The oxygen present encourages the proliferation of "good" bacteria that mineralise the sediment on the bottom of the tank, keeping the water purer. The absence of light also serves to avoid algae formation, contributing to keeping a natural balance inside the tank.

DIAGRAM OF SYSTEM WITH "PX" MODULE WITH SUBMERSIBLE PUMP

OPERATION:

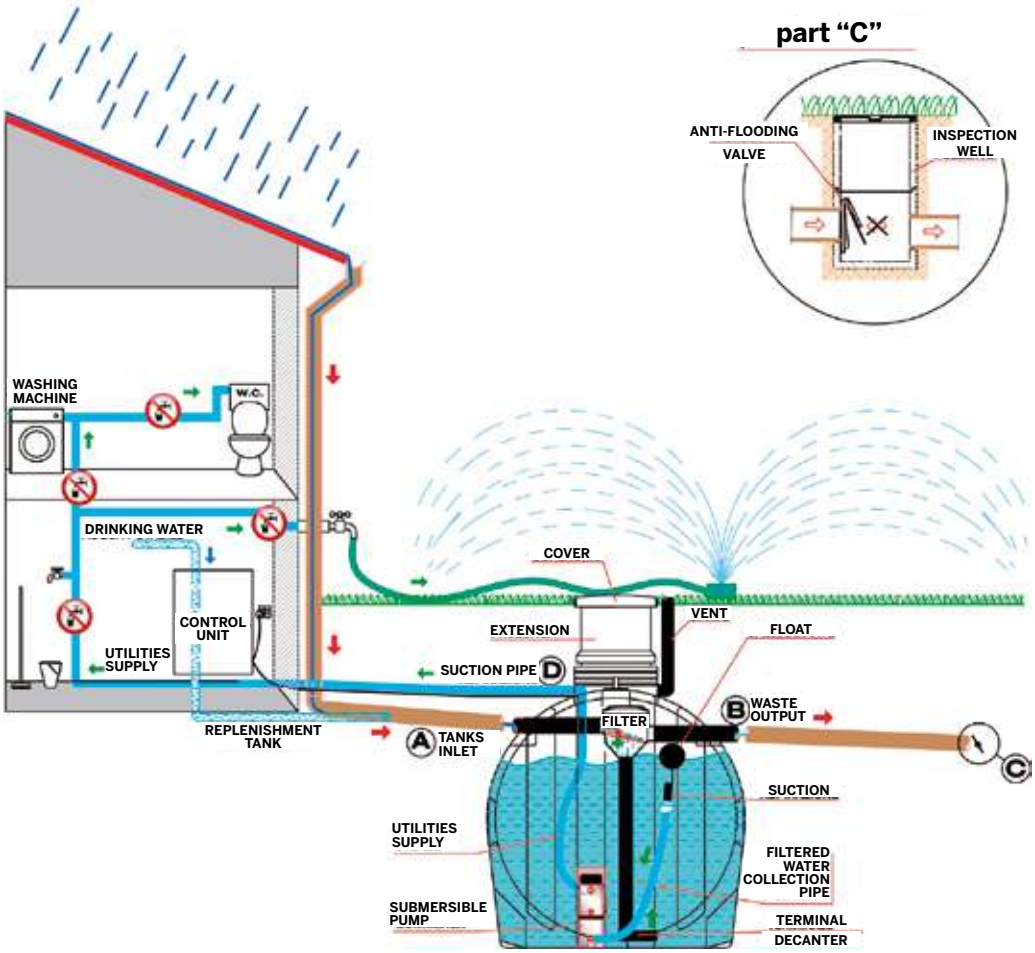

The PX module manages and distributes rainwater using a submersible pump.
The Kit is composed of a submersible pump and a drinking water integration system. The main purpose of the PX control unit is to give priority to rainwater consumption. When the rainwater contained in the collection tank is insufficient, the control unit switches to the water mains supply, thereby ensuring a continuous inflow of water to the intake points. The rupture unit included in the PX model prevents any possible contamination in the tank to come into contact with the water mains.

EXAMPLES OF CONNECTION TO THE RAIN BASIC SYSTEM:

RAIN BASIC

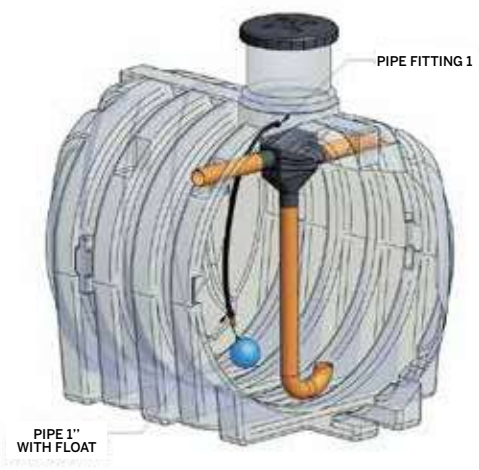

RAIN BASIC WITH SUBMERSIBLE PUMP

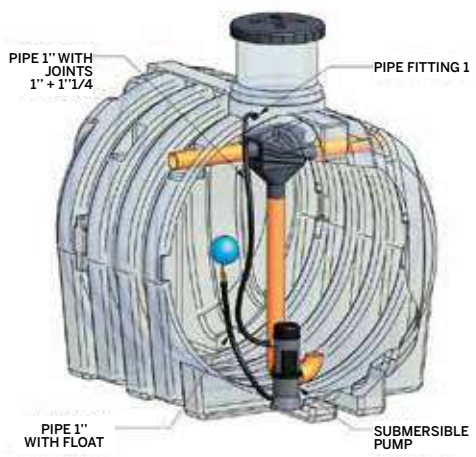

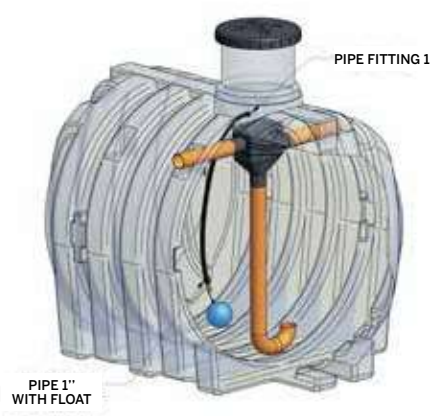

MODEL	CODE	Notes
RAIN BASIC CU 3.000-B (•)	A520074 V0000 PRE-FITTED TANK	
RAIN BASIC CU 5.000-B (•)	A520080 V0000 PRE-FITTED TANK	
RAIN BASIC CU 10.000-B (•)	A520092 V0000 PRE-FITTED TANK	

(•) Tanks exclusively produced in the factory in Limena (PD)

Not for drinking water

Model for underground only

Handling by forklift

WARRANTY: 2 YEARS

Standard supply of the pre-fitted tank:
Extension; filter, intake pipe with float; settling terminal; arrangement for plumbing connections. The control unit and the electrical connections should be bought separately and connected during installation.
The standard supply excludes plumbing material (pipes, joints, silicone, etc.), various accessories, electrical connections, masonry and excavation work, installation and any other details not clearly stated.

N.B.: The useful capacity of the pre-fitted tanks is reduced by approximately 15% for the models CU 3.000 and CU 5.000, and by 10% for the model CU 10.000.

CONTROL UNIT:

MODEL	CODE	Notes
CONTROL UNIT MOD. "S"	L3A0000	
CONTROL UNIT MOD. "F"	L3A0010	
KIT UNIT MOD. "PX" **	L3A0020	

WARRANTY: 2 YEARS

** With stainless steel submersible pump, safety device, intake pipe (L. 2.5; ø1"), cable gland M16.

IMPORTANT NOTES

Remember that:

- Before proceeding with installation of the rainwater collection system, you must assess the hydro-geological and morphological features of the ground;
- It is necessary to read the installation instructions supplied with the system carefully;
- Installation must be carried out as state-of-the-art by a specialist technician;
- A correct installation procedure, together with regular cleaning of the filter, is fundamental for a good and long-lasting working system.
- The water supplied from the utilities connected to the rainwater recovery system is not drinkable.
- For underground installation, follow the instructions on page 88.

MODULES AND CONTROL UNITS FOR "RAIN BASIC" SYSTEMS

Management and control systems
The command unit controls and manages the entire system, guaranteeing continuous operation in total safety.
You can choose between three different management and distribution systems of the rainwater: the S model (base), the F model (advanced) and the PX model with a stainless steel submersible pump.

MODEL "S" and "F" CONTROL UNIT with self-priming pump

CONTROL UNIT	Code	Vacuum weight (kg)	Weight in operation (kg)	Height	Width	Depth
S	L3A0000	18	33	718	650	260
F	L3A0010	20	35	850	750	290

Warning: the control unit must be installed inside the home, in an enclosed, covered and dry place.
CONTROL UNITS COMPLY WITH EUROPEAN STANDARD EN 1717

"PX" SUBMERSIBLE PUMP UNIT

Module	Code	Panel height	Panel width	Panel depth
PX	L3A0020	718	650	260

The PX unit is composed of a stainless steel submersible pump, a safety device, an intake pipe (L. 2.5 m; ø 1") and a cable gland M16.

GENERAL DESCRIPTION OF THE RAIN SYSTEM

A control unit controls the management and distribution system of the rainwater. The main scope of this control unit is to give priority to rainwater consumption rather than mains water. Generally, the system is delimited to an irrigation system, washing machine, toilet flush tank and floor washing (N.B. The water supplied by the system is never drinkable).
The control unit controls the inflow of drinking water even if you want to use mains water instead of rainwater. The two independent water reserves (rainwater and mains water) ensure the regular working of the system. This switch can take place via a manual command, or automatically (using a level indicator for the accumulated rainwater) if the tank does not contain a sufficient rainwater reserve.
The control unit is equipped with "open drainage" in compliance with the standard EN 1717, and with a safety device that prevents any possible contaminants in the tank to come in contact with the water mains.

Basic characteristics of the control units (Models "S" and "F"):

- The control units work with an automatic electronic device and are equipped with an external, multi-stage, self-priming, centrifugal pump.
- The control units are also equipped with an automatic system to switch to the intake of drinking water if the rainwater reserve tank is empty; if needed, this operation can take place manually.

Additional characteristics of the Model "F" control unit:
The "F" model control unit, in addition to the characteristics of the "S" model, is equipped with a microprocessor with these additional features:

- signals any anomalies in the system via acoustic and optical indicator;
- indicates the level (expressed as a percentage) of the water collected inside the underground tank;
- periodically replaces the water collection inside the small tank of the control unit to avoid standing water in the drinking water supply pipes;
- allows installation of an additional submersible pump.

Characteristics of the "PX" module:
System equipped with a stainless steel submersible pump and a safety device.

CONTROL UNIT TECHNICAL DATA

Performance	Mod. "S"	Mod. "F"	Mod. "PX"
Max. capacity	85 l/min	85 l/min	60 l/min
Max. head H	45 m	48 m	51 m
Temperature of pumped liquid	From +5°C to +35°C	From +5°C to +35°C	From +5°C to +35°C
Maximum pressure of the system	6 bar	6 bar	N.A.
Mains maximum pressure	4 bar	4 bar	N.A.
Minimum mains capacity	10 l/min	10 l/min	N.A.
Maximum height of the highest use point	15 m	12 m	10 m
Power supply voltage	Volt 230 Hz50	Volt 230 Hz50	Volt 230 Hz50
Max. absorbed power	1000 W	1000 W	1000 W
Room temperature	Min +5°C Max +40°C	Min +5°C Max +40°C	Min +5°C Max +40°C
Dimensions of water mains pipe	3/4"	3/4"	3/4"
Dimensions of delivery pipe	1"	1"	1"
Dimensions of intake pipe	1"	1"	1"
Overflow dimensions	DN 50	DN 50	N.A.
Max. installation altitude	N.A.	1000 m	N.A.
Water type	4 – 9 ph	4 – 9 ph	4 – 9 ph
Level sensor	float switch ON/OFF with 20 metres of cable	float switch ON/OFF with 20 metres of cable + electronic transducer with 20 metres of cable	N.A.

N.A.: Not Applicable
Elbi reserves the right to make changes without prior notification.
All measures are subject to use tolerance. The data outlined are approximate.

WASTEWATER

WASTEWATER OR WATER FROM INDUSTRIAL AND URBAN WASTE ARE CONTAMINATED WITH ORGANIC AND INORGANIC MATERIAL THAT MAKES THE WATER DANGEROUS FOR HUMAN HEALTH AND THE ENVIRONMENT. THE WASTEWATER CAN BE SPREAD THROUGH THE ENVIRONMENT ONLY AFTER A PROPER DEPURATION TREATMENT.

Reference standards

The Legislative Decree no. 152/2006 represents the current environmental regulations. The primary objective is to promote the quality of human life, to be pursued through the protection and improvement of environmental conditions and the wise and rational use of natural resources.

The Elbi products of the line dedicated to the containment and water purification treatment have been designed and manufactured in compliance with the specific regulations in force:

• Sand / Grease traps	Comply with standard UNI EN 1825-1
• Septic tanks and biological tanks	Comply with standard UNI EN 12566-1
• Activated sludge treatment plants and percolated filters	Comply with standard UNI EN 12566-6
• Gravitational oil traps	Comply with standard UNI EN 858-1
• Combined systems	Comply with standard UNI EN 12566-3

European Community
Since 1991, the European Directives have provided for the establishment of programs and laws for the application of those rules, concerning the collection and wastewater in general.

DG / DG-PRO

POLYETHYLENE SAND/GREASE TRAPS FOR WASTEWATER TREATMENT

DG 5 - 20

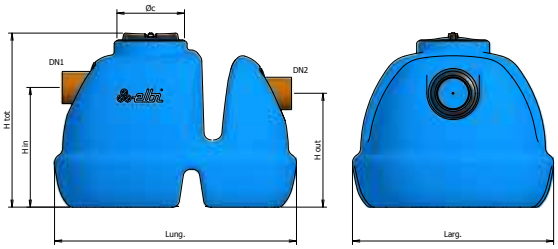

DG-PRO 45 - 350

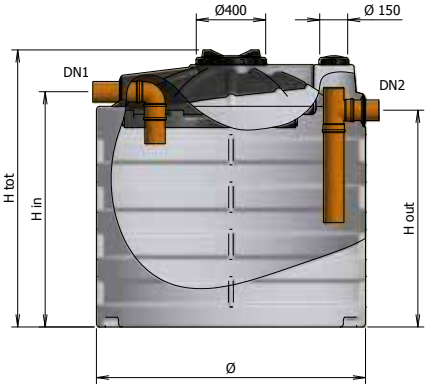

Not for drinking water

Model exclusively for underground
Only DG 5 ÷ 20: for use also above ground

Handling by forklift

Reference Standards
Legislative Decree no. 152/2006
UNI EN
1825-2: 2003

WARRANTY: 2 YEARS

MODEL	CODE	PLACE SETTINGS	POPULATION EQUIVALENT	NOMINAL SIZE N	VOLUME TOTAL	HEIGHT H tot	HEIGHT H in	HEIGHT H out	WIDTH W	FAT VOLUME V	SLUDGE VOLUME V	DN1/DN2	Notes
		No.	P.E.	lt/s	litres	mm	mm	mm	mm	litres	litres	mm	
DG 5	A500005	10 - 15	6	0,30	95	600	410	390	830 x 690	10	25	110	
DG 10	A500010	21 - 30	11	0,53	190	710	520	500	995 x 825	20	50	110	
DG 15	A500015	31 - 46	16	0,80	285	795	605	585	1135 x 945	30	75	110	
DG 20	A500020	41 - 62	21	1,07	380	875	685	665	1255 x 1040	40	100	110	
DG-PRO 45	A500045	92 - 138	52	2,39	853	1240	1030	935	1310	90	225	110	
DG-PRO 60	A500060	127 - 190	70	3,33	1170	1500	1290	1195	1310	120	300	110	
DG-PRO 75	A500075	161 - 242	85	4,29	1490	1760	1550	1455	1310	150	375	110	
DG-PRO 110	A500110	235 - 353	110	6,22	2170	1700	1445	1330	1650	220	550	125	
DG-PRO 140	A500140	295 - 445	135	7,82	2740	1990	1735	1620	1650	280	700	125	
DG-PRO 170	A500170	359 - 535	185	9,42	3310	2280	2025	1910	1650	340	850	125	
DG-PRO 240	A500240	510 - 765	265	13,47	4710	1900	1605	1475	2270	480	1200	160	
DG-PRO 350	A500350	735 - 1093	370	18,93	6710	2430	2130	2000	2270	700	1750	160	

Use
Primary treatment of residential grey waters.
The sand/grease trap is installed near the kitchen drains, laundry and bathroom to separate grease, foam, vegetable and animal fats and other solid particles in the wastewater.

Operation
The system uses gravity to eliminate all the solid particles heavier than water and deposits them on the bottom of the tank. Furthermore, oils, fats and substances lighter than water are separated by flotation; this phenomenon reduces the presence of oily substances, which tend to coat biological materials thus preventing oxidation.

Maintenance
For the correct management of DG/DG-PRO and to achieve the required purification results, please follow these guidelines:

- Regularly inspect (every 2 months) the DG/DG-PRO to verify that no coarse materials have accidentally blocked the pipes;
- Once a year (or more frequently if necessary) carry out the removal of sludge and separated oils and greases. Such removal must be carried out by a specialized company.
- As provided for by the Consolidated Act on Water (Legislative Decree 152/06 as amended), and suggested by the normal hygiene practice, periodically inspect and wash the inspection well.

Specification Item
Sand/grease trap manufactured in rotational polyethylene, in a single structure, free of joints and equipped with inlet and outlet holes, and inspection and sampling lids. Suitable for underground installation.
The Sand/Grease trap is sized according to the UNI EN 1825-2: 2003
For the calculation of the place settings, the discharge coming from the kitchens was considered (density factor fd=1), the wastewater temperature below 60°C (temperature factor ft=1), the use of detergents or rinsing substances (detergents and rinse substances factor fr=1.3), the volume of water used per meal of 50 litres (restaurant), as peak flow factor 8.5 (restaurant) and as average daily duration of 4 hours operation for "minimum place settings" and 6 hours for "maximum place settings".

PROJECT PARAMETERS		
NS = corresponds to the nominal size of the grease trap given by the flow rate expressed as l/s multiplied by coefficients related to the temperature, the density of the grease/oil and the influence of detergents, as indicated in UNI EN 1825		
Degreaser minimum volume	l/NS	240
Concentration of animal and vegetable oils and fats	mg/l	200

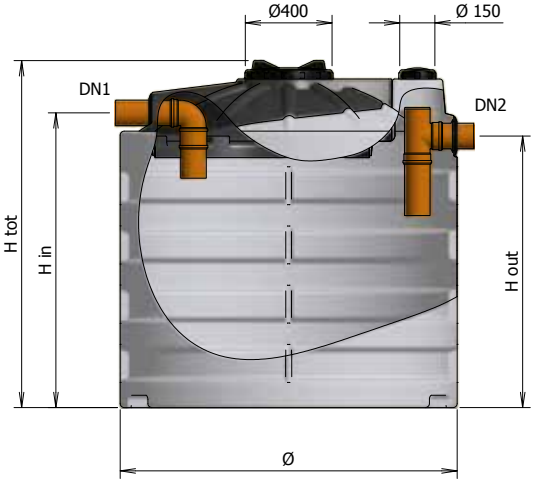

Not for drinking water

Model for underground only

Handling by forklift

Reference Standards
Legislative Decree N ° 152/2006
UNI EN 12566-1

WARRANTY: 2 YEARS

MODEL	CODE	POPULATION EQUIVALENT	DAILY FLOW	PEAK FLOW	VOLUMES OF TOTAL DIMENSIONS	DIMENSIONS OF SEPTIC TANK Ø x h	DIAMETER OF PIPES Ø	USEFUL VOLUME	HEIGHT H in	HEIGHT H out	Notes
		P.E.	m³/g	m³/h	m³	mm	mm	Litres	mm	mm	
ST 6	A5P0006	6	1,2	0,14	1,67	1310 x 1240	110	853	1030	935	
ST 9	A5P0009	9	1,8	0,18	2,02	1310 x 1500	110	1150	1290	1195	
ST 12	A5P0012	12	2,4	0,24	2,37	1310 x 1760	110	1490	1550	1455	
ST 15	A5P0015	17	3,4	0,34	3,63	1650 x 1700	125	2170	1445	1330	
ST 18	A5P0018	21	4,2	0,42	4,25	1650 x 1990	125	2740	1735	1620	
ST 25	A5P0025	25	5	0,5	4,87	1650 x 2280	125	3310	2025	1910	
ST 35	A5P0035	35	7	0,7	7,69	2270 x 1900	160	4710	1605	1475	
ST 50	A5P0050	50	10	1	9,83	2270 x 2430	160	6710	2130	2000	

Available individual, dual and three chamber.

Use
Primary treatment of residential black water.
The septic tank is installed downstream of the grease traps and/or drains of sewage (W.C.) to purify the drains through an anaerobic digestion process. The septic tanks can be installed in series (individual, dual chamber and three chambers).

Operation
ST septic tanks are particularly indicated to purify drains in residential settlements of small size. Inside of septic tanks, the process of separation of oils and greases comes through flotation, while the separation of solids occurs through sedimentation. Furthermore, a process of anaerobic digestion (without the presence of oxygen) takes place. The output will result in wastewater with solubilized and dispersed solids. Battery installation increases the treatment efficacy and significantly reduces the amount of suspended solids.

Maintenance
For the correct management of the ST and to achieve the required purification results, please follow these guidelines:
- Regularly inspect the ST to verify that no coarse materials have accidentally blocked the pipes;
- Remove the excess sludge on a regular basis (as per local regulations). Such removal must be carried out by a specialized company;
- As provided for by the Consolidated Act on Water (Legislative Decree 152/06 as amended), and suggested by the normal hygiene practice, periodically inspect and wash the inspection well.

Specification Item
Septic tank manufactured in rotational polyethylene, in a single structure, free of joints and reinforcement plating, equipped with inlet and outlet holes and inspection and sampling lids. Suitable for underground installation. Septic tank constructed in accordance with the descriptions and purification capacity indicated by the Committee of Ministers for the Protection of waters against pollution (Ordinary Supplement to Official Journal no. 48 of 21/02/77 paragraph 4).

PROJECT PARAMETERS		
Water supply per P.E.	lt/d	150/200
Average flow (Q24) per P.E.	lt/h	8,3
Peak flow (Qp) per P.E.	lt/h	20
Specific organic load	gr BOD_5/P.E.x d	60
Concentration of the biodegradable fraction	mg/l	300
COD/BOD_5		1,67-2,2
Total daily nitrogen load per P.E.	kg/P.E.x d	<0,012
Total surfactant concentration	mg/l	<15
Concentration of oils and fats	mg/l	<10
Retention time during the treatment stage	h	12 c.a.

Figure 1
Installation in series of model ST for domestic use, drainage into public sewers

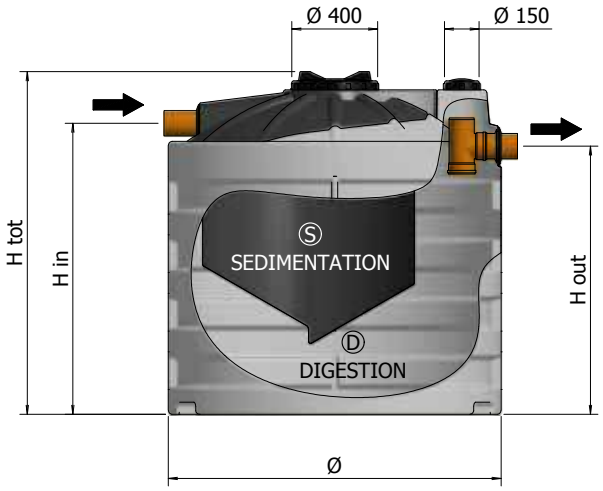

Not for drinking water

Model for underground only

Handling by forklift

Reference Standards
Legislative Decree N ° 152/2006
UNI EN 12566-3

WARRANTY: 2 YEARS

MODEL	CODE	POPULATION EQUIVALENT	SEDIMENTATION TANK	DIGESTER	VOLUMES OF TOTAL DIMENSIONS	IMHOFF DIMENSIONS Ø x H tot.	DIAMETER OF PIPES Ø	HEIGHT H in	HEIGHT H out	Notes
		P.E.	litres	litres	m^3	mm	mm	mm	mm	
IMHOFF 6	A5N0006	6	255	730	1,67	1310 x 1240	110	1030	935	
IMHOFF 9	A5N0009	9	365	930	2,02	1310 x 1500	110	1290	1195	
IMHOFF 12	A5N0012	12	490	1240	2,37	1310 x 1760	110	1550	1455	
IMHOFF 15	A5N0015	15	630	1520	3,63	1650 x 1700	125	1445	1330	
IMHOFF 18	A5N0018	18	760	1920	4,25	1650 x 1990	125	1735	1620	
IMHOFF 25	A5N0025	25	1000	2520	4,87	1650 x 2280	125	2025	1910	
IMHOFF 35	A5N0035	36	1450	3610	7,69	2270 x 1900	160	1605	1475	
IMHOFF 50	A5N0050	50	2050	5050	9,83	2270 x 2430	160	2130	2000	

Use
Primary treatment of residential black water.
The Imhoff is installed downstream of the grease traps and/or drains of sewage (W.C.) to purify the drains through an anaerobic digestion process.

Operation
The IMHOFF biological tank is a system for primary sedimentation, accumulation and anaerobic digestion (carried out by organisms that live in the absence of oxygen) of domestic drains in buildings that are not served by urban sewage mains. Upstream of the IMHOFF tank a grease trap should be installed to avoid greasy/oily substances preventing biological oxidation. Any rainwater drains must be deviated downstream of the IMHOFF tank.

Maintenance
For the correct management of the Imhoff and to achieve the required purification results, please follow these guidelines:

- Regularly inspect the Imhoff to check that there is no gross material received accidentally to clog the pipes;
- Remove the excess sludge on a regular basis. Such removal must be carried out by a specialized company.
- As provided for by the Consolidated Act on Water (Legislative Decree 152/06 as amended), and suggested by the normal hygiene practice, periodically inspect and wash the inspection well.

Specification Item
Imhoff biological tank for the primary treatment of residential wastewater manufactured in rotational polyethylene, a single structure free of joints and reinforcement plating, equipped with inlet and outlet holes, a sedimentation cone, a digestion tank and inspection and sampling lids. Suitable for underground installation.
The Imhoff biological tank is constructed in accordance with the descriptions and purification capacity indicated by the Committee of Ministers for the Protection of waters against pollution (Ordinary Supplement to Official Journal no.48 of 21/02/77 paragraph 4), summarized below:

PROJECT PARAMETERS		
Water supply per P.E.	lt/d	200
Average flow (Q24) per P.E.	lt/h	8,3
Peak flow (Qp) per P.E.	lt/h	20
Specific organic load	gr BOD_5/P.E.x d	60
Concentration of the biodegradable fraction	mg/l	300
COD/BOD_5		1,67-2,2
Total daily nitrogen load per P.E.	kg/P.E.x d	<0,012
Total surfactant concentration	mg/l	<15
Concentration of oils and fats	mg/l	<10
Sedimentation tank volume	l/PE	40
Digester volume	l/PE	100

Figure 2
Installation of IMHOFF model for domestic use, drainage into public sewers

FAN

ANAEROBIC PERCOLATING FILTERS

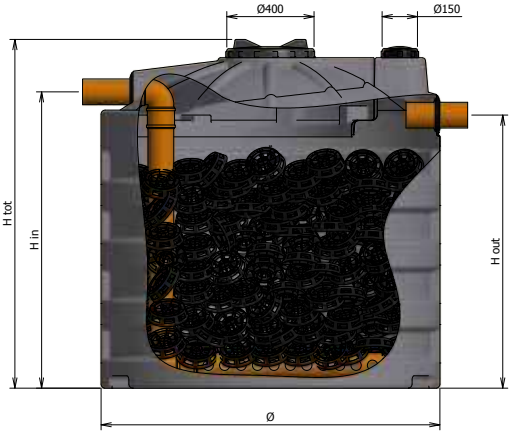

Not for drinking water

Model for underground only

Handling by forklift

Reference Standards
Reference Standards Legislative Decree N ° 152/2006
UNI EN 12566-3

WARRANTY: 2 YEARS

MODEL	CODE	POPULATION EQUIVALENT	FILTER VOLUME	FILTER SURFACE	TOTAL HEIGHT H tot	HEIGHT H in	HEIGHT H out	DIAMETER Ø	DIAMETER OF PIPES Ø	Notes
		P.E.	litres	m^2	mm	mm	mm	mm	mm	
FAN 6	A5B2006	6	853	102	1240	1030	935	1310	110	
FAN 9	A5B2009	9	1150	120	1500	1290	1195	1310	110	
FAN 12	A5B2012	12	1490	156	1760	1550	1455	1310	110	
FAN 15	A5B2015	15	2170	240	1700	1445	1330	1650	125	
FAN 18	A5B2018	18	2740	300	1990	1735	1620	1650	125	
FAN 25	A5B2025	25	3310	360	2280	2025	1910	1650	125	
FAN 35	A5B2035	36	4710	540	1900	1605	1475	2270	160	
FAN 50	A5B2050	50	6710	780	2430	2130	2000	2270	160	

Use
Secondary treatment of residential black water.
Aerobic percolating filters are to be installed downstream of the Imhoff tank to allow the drain of purified water directly into a surface watercourse, without the risk of polluting the environment.

Operation
The anaerobic percolating filter is a biological treatment system consisting of a tank containing plastic media for the high specific surface area. The clarified water from the Imhoff tank flow into the anaerobic percolating filter; these filter through the fill media forming a layer of microbial slime (biofilm). In this way, the contact surface between the biofilm and the anaerobic microorganisms increases and thus the exposure of the biodegradable material to microorganisms increases. These anaerobic bacteria (that is, which do not require oxygen for growth) adhere to the fill media and feed on the organic substances contained in the wastewater, purifying it.

Maintenance
For the correct management of the FAN and to achieve the required purification results, please follow these guidelines:

- Regularly inspect the FAN to check that there is no gross material received accidentally to clog the pipes;
- With the passing of time, the organic substances, some mineralized, accumulate in the bottom of the tank or between the interstices of the random fill media, and the functionality of the system can reduce. It is, therefore, necessary to wash the random fill media with water under pressure, aspirating the washing water at the same time. The backwash of the random fill media and the removal of mineralized sludge should be carried out at least once every five years. Such removal must be carried out by a specialized company;
- As provided for by the Consolidated Act on Water (Legislative Decree 152/06 as amended), and suggested by the normal hygiene practice, periodically inspect and wash the inspection well.

Specification Item
Anaerobic percolating filter manufactured in rotational polyethylene for secondary treatment of residential black water. Monolithic structure, free of joints and with reinforcement plate, with entry and exit hole, with plastic random fill media with a specific surface area of 120 m^2/m^3 and inspection and sampling lids. Suitable for underground installation. The anaerobic percolating filter is dimensioned according to the instructions contained in Legislative Decree no. 152/2006 and summarized below:

PROJECT PARAMETERS		
Water supply per P.E.	lt/d	200
Average flow (Q24) per P.E.	lt/h	8,3
Peak flow (Qp) per P.E.	lt/h	20
Specific organic load	gr BOD_5/P.E.x d	42
Concentration of the biodegradable fraction	mg/l	240
COD/BOD_5		1,67-2,2
Total daily nitrogen load per P.E.	kg/P.E.x d	<0,012
Total surfactant concentration	mg/l	<15
Concentration of oils and fats	mg/l	<10
Specific surface of the random fill media	m^2/m^3	120
Digester volume	l/PE	100

Figure 3
System composed of DG-PRO, IMHOFF, FAN models for domestic use, with drain into watercourses

FAN ERU

ANAEROBIC PERCOLATING FILTERS EMILIA ROMAGNA/UMBRIA

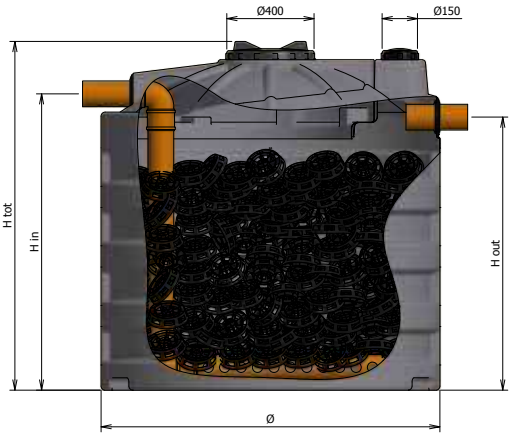

Not for drinking water

Model for underground only

Handling by forklift

Reference Standards of the
Decree of the Regional Government of Emilia Romagna 1053/2003 and Decree of the Regional Government of Umbria 1171/2007

WARRANTY: 2 YEARS

MODEL	CODE	POPULATION EQUIVALENT	FILTER HEIGHT H	FILTER VOLUME V	FILTER SURFACE S	S x H²	DAILY FLOW	HEIGHT H tot	HEIGHT H in	HEIGHT H out	DIAMETER Ø	DIAMETER OF PIPES Ø	Notes
		P.E.	m	litres	m²	n	m³/g	mm	mm	mm	m	mm	
FAN ERU 1	A5B2001 00ERU	1	0,90	825	1,35	1,09	0,2	1240	1030	935	1,31	110	
FAN ERU 2	A5B2002 00ERU	2	1,25	1284	1,35	2,10	0,4	1760	1550	1455	1,31	110	
FAN ERU 3	A5B2003 00ERU	3	1,20	1958	2,14	3,08	0,6	1700	1445	1330	1,65	110	
FAN ERU 4	A5B2004 00ERU	4	1,40	2368	2,14	4,19	0,8	1990	1735	1620	1,65	110	
FAN ERU 8	A5B2008 00ERU	8	1,42	4550	4,05	8,16	1,6	1900	1605	1475	2,27	110	
FAN ERU 9	A5B2009 00ERU	9	1,50	5033	4,05	9,10	1,8	2430	2130	2000	2,27	110	
FAN ERU 14	A5B2014 00ERU	14	1,50	8800	6,27	14,11	2,8	2140	1950	1920	3,41 x 2,13	125	

Use
Secondary treatment of residential black water.
Aerobic percolating filters are to be installed downstream of the Imhoff tank to allow the drain of purified water directly into a surface watercourse, without the risk of polluting the environment.

Operation
The anaerobic percolating filter is a biological treatment system consisting of a tank containing plastic media for the high specific surface area. The clarified water from the Imhoff tank flow into the anaerobic percolating filter; these filter through the fill media forming a layer of microbial slime (biofilm). In this way, the contact surface between the biofilm and the anaerobic microorganisms increases and thus the exposure of the biodegradable material to microorganisms increases. These anaerobic bacteria (that is, which do not require oxygen for growth) adhere to the fill media and feed on the organic substances contained in the wastewater, purifying it.

Maintenance
For the correct management of the FAN ERU and to achieve the required purification results, please follow these guidelines:

- Regularly inspect the FAN ERU to check that there is no gross material received accidentally to clog the pipes;
- With the passing of time, the organic substances, some mineralized, accumulate in the bottom of the tank or between the interstices of the random fill media, and the functionality of the system can reduce. It is, therefore, necessary to wash the random fill media with water under pressure, aspirating the washing water at the same time. The backwash of the random fill media and the removal of mineralized sludge should be carried out at least once every five years. Such removal must be carried out by a specialized company;
- As provided for by the Consolidated Act on Water (Legislative Decree 152/06 as amended), and suggested by the normal hygiene practice, periodically inspect and wash the inspection well.

Specification Item
Aerobic percolating filter manufactured in rotational polyethylene for secondary treatment of residential black water. Monolithic structure, free of joints and with reinforcement plating, with entry and exit hole, with plastic random fill media with a specific surface area of 120 m^2/m^3 and inspection and sampling lids. Suitable for underground installation. The anaerobic percolating filter is dimensioned according to the Decree of Regional Government of Emilia Romagna 1053/2003 and Decree of Regional Government of Umbria 1171/2007.
Faced with a maximum height of 1 meter, the volume of the filter is proportionate to the PE served at a rate of 1 m^3 for each PE; however, the report specified in the applicable standards is respected and outlined below:

$S = N / h^2$ where:	
N = number of PE	
h = height of the filter (m)	
S = filter surface (m^2)	With 0.9 m < h < 1,5m

Figure 4
System composed of DG-PRO, IMHOFF, FAN ERU models for domestic use, with drainage into watercourses

FAE

AEROBIC PERCOLATING FILTERS

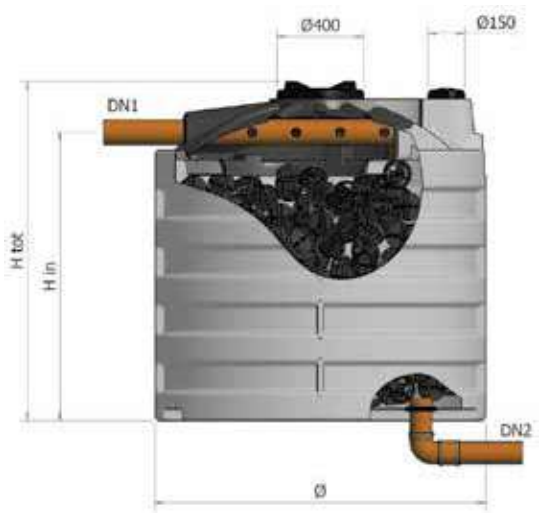

Not for drinking water

Model for underground only

Handling by forklift

Reference Standards
Legislative Decree N ° 152/2006
UNI EN 12566-3

WARRANTY: 2 YEARS

MODEL	CODE	POPULATION EQUIVALENT	FILTER VOLUME	FILTER SURFACE	HEIGHT H tot	HEIGHT H in	DIAMETER Ø	DIAMETER OF PIPES Ø	Notes
		P.E.	litres	m^2	mm	mm	mm	mm	
FAE 6	A5B1006	6	853	102	1240	1030	1310	110	
FAE 9	A5B1009	9	1150	120	1500	1290	1310	110	
FAE 12	A5B1012	12	1490	156	1760	1550	1310	110	
FAE 15	A5B1015	15	2170	240	1700	1445	1650	125	
FAE 18	A5B1018	18	2740	300	1990	1735	1650	125	
FAE 25	A5B1025	25	3310	360	2280	2025	1650	125	
FAE 35	A5B1035	36	4710	540	1900	1605	2270	160	
FAE 50	A5B1050	50	6710	780	2430	2130	2270	160	

Use
Secondary treatment of residential black water.
Anaerobic percolating filters are to be installed downstream of the Imhoff tank to allow the drain of purified water directly into a surface watercourse, without the risk of polluting the environment.

Operation
The aerobic percolating filter is a biological treatment system consisting of a tank containing plastic media for the high specific surface area. The clarified water from the Imhoff tank flow into the aerobic percolating filter; these filter through the fill media forming a layer of microbial slime (biofilm). In this way, the contact surface between the biofilm and the aerobic microorganisms increases and thus the exposure of the biodegradable material to microorganisms increases. These aerobic bacteria (that is, which consume oxygen for growth) adhere to the fill media and feed on the organic substances contained in the wastewater, purifying it.

Maintenance
For the correct management of the FAE and to achieve the required purification results, please follow these guidelines:

- Regularly inspect the FAE to check that there is no gross material received accidentally to clog the pipes;
- With the passing of time, the organic substances, some mineralized, accumulate in the bottom of the tank or between the interstices of the random fill media, and the functionality of the system can reduce. It is, therefore, necessary to wash the random fill media with water under pressure, aspirating the washing water at the same time. The backwash of the random fill media and the removal of mineralized sludge should be carried out at least once every five years. Such removal must be carried out by a specialized company;
- As provided for by the Consolidated Act on Water (Legislative Decree 152/06 as amended), and suggested by the normal hygiene practice, periodically inspect and wash the inspection well.

Specification Item
An aerobic percolating filter manufactured in rotational polyethylene for secondary treatment of residential black water. Monolithic structure, free of joints and with reinforcement plate, with entry and exit hole, with plastic random fill media with a specific surface area of 120 m^2/m^3 and inspection and sampling lids. Suitable for underground installation. The aerobic percolating filter is dimensioned according to the instructions contained in Legislative Decree no. 152/2006 and summarized below:

PROJECT PARAMETERS		
Water supply per P.E.	lt/d	200
Average flow (Q24) per P.E.	lt/h	8,3
Peak flow (Qp) per P.E.	lt/h	20
Specific organic load	gr BOD_5/P.E.x d	42
Concentration of the biodegradable fraction	mg/l	240
COD/BOD_5		1,67-2,2
Total daily nitrogen load per P.E.	kg/P.E.x d	<0,012
Total surfactant concentration	mg/l	<15
Concentration of oils and fats	mg/l	<10
Specific surface of the random fill media	m^2/m^3	120

FAE ERU

AEROBIC PERCOLATING FILTERS EMILIA ROMAGNA/UMBRIA

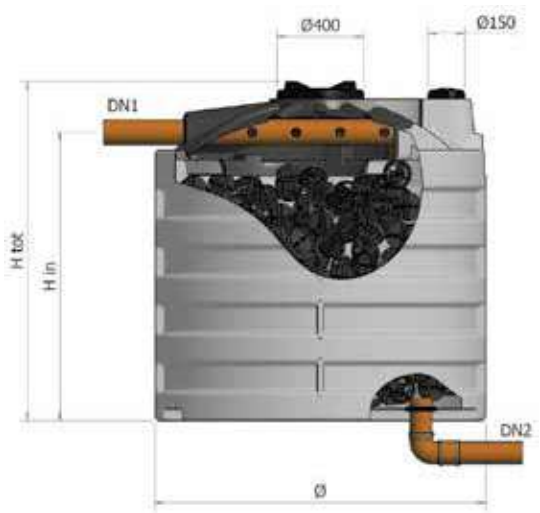

Not for drinking water

Model for underground only

Handling by forklift

Reference Standards of the
Decree of the Regional Government of Emilia Romagna 1053/2003 and Decree of the Regional Government of Umbria 1171/2007

WARRANTY: 2 YEARS

MODEL	CODE	POPULATION EQUIVALENT	FILTER HEIGHT H	FILTER VOLUME V	FILTER SURFACE S	S x H²	DAILY FLOW	HEIGHT H tot	HEIGHT H in	DIAMETER Ø	DIAMETER OF PIPES Ø	Notes
		P.E.	m	litres	m²	n	m³/g	mm	mm	m	mm	
FAE ERU 1	A5B1001 00ERU	1	0,86	825	1,159	1,00	0,2	1240	1030	1,31	110	
FAE ERU 2	A5B1002 00ERU	2	1,25	1284	1,684	2,10	0,4	1760	1550	1,31	110	
FAE ERU 3	A5B1003 00ERU	3	1,20	1958	2,565	3,08	0,6	1700	1445	1,65	110	
FAE ERU 4	A5B1004 00ERU	4	1,40	2368	2,992	4,19	0,8	1990	1735	1,65	110	
FAE ERU 8	A5B1008 00ERU	8	1,42	4550	5,744	8,16	1,6	1900	1605	2,27	110	
FAE ERU 9	A5B1009 00ERU	9	1,50	5033	6,068	9,10	1,8	2430	2130	2,27	110	
FAE ERU 14	A5B1014 00ERU	14	1,50	8800	9,405	14,11	2,8	2140	1890	3,41 x 2,13	125	

Use
Secondary treatment of residential black water.
Anaerobic percolating filters are to be installed downstream of the Imhoff tank to allow the drain of purified water directly into a surface watercourse, without the risk of polluting the environment.

Operation
The aerobic percolating filter is a biological treatment system consisting of a tank containing plastic media for the high specific surface area. The clarified water from the Imhoff tank flow into the aerobic percolating filter; these filter through the fill media forming a layer of microbial slime (biofilm). In this way, the contact surface between the biofilm and the aerobic microorganisms increases and thus the exposure of the biodegradable material to microorganisms increases. These aerobic bacteria (that is, which consume oxygen for growth) adhere to the fill media and feed on the organic substances contained in the wastewater, purifying it.

Maintenance
For the correct management of the FAE and to achieve the required purification results, please follow these guidelines:

- Regularly inspect the FAE to check that there is no gross material received accidentally to clog the pipes;
- With the passing of time, the organic substances, some mineralized, accumulate in the bottom of the tank or between the interstices of the random fill media, and the functionality of the system can reduce. It is, therefore, necessary to wash the random fill media with water under pressure, aspirating the washing water at the same time. The backwash of the random fill media and the removal of mineralized sludge should be carried out at least once every five years. Such removal must be carried out by a specialized company;
- As provided for by the Consolidated Act on Water (Legislative Decree 152/06 as amended), and suggested by the normal hygiene practice, periodically inspect and wash the inspection well.

Specification Item
An aerobic percolating filter manufactured in rotational polyethylene for secondary treatment of residential black water. Monolithic structure, free of joints and with reinforcement plate, with entry and exit hole, with plastic random fill media with a specific surface area of 120 m^2/m^3 and inspection and sludge sampling lids. Suitable for underground installation. The aerobic percolating filter is dimensioned according to the Decree of Regional Government of Emilia Romagna 1053/2003 and Decree of the Regional Government of Umbria 1171/2007:
Faced with a maximum height of 1 meter, the volume of the filter is proportionate to the PE served at a rate of 1 m^3 for each PE; however, the report specified in the applicable standards is respected and outlined below:

$S = N / h^2$ where:	
N = number of PE	
h = height of the filter (m)	
S = filter surface (m^2)	With 0.9 m < h < 1,5m

FBC

LOW LOAD ACTIVATED SLUDGE TREATMENT PLANTS

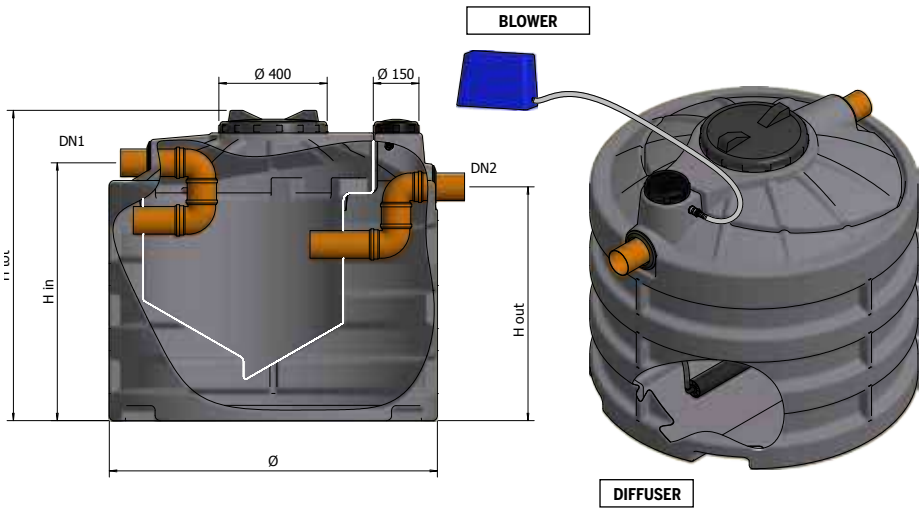

Not for drinking water

Model for underground only

Handling by forklift

Reference Standards
Legislative Decree N ° 152/2006
UNI EN 12566-3

WARRANTY: 2 YEARS

MODEL	CODE	POPULATION EQUIVALENT	HEIGHT H tot	HEIGHT H in	HEIGHT H out	DIAMETER Ø	SEDIMENTATION TANK VOLUME	DIGESTER VOLUME	AERATION RETENTION TIME	SEDIMENTATION RETENTION TIME	BLOWER POWER	Notes
		P.E.	mm	mm	mm	mm	litres	litres	hours	hours	Watt	
FBC 6	A5D1006	6	1240	1115	1030	1310	255	730	12,6	4,9	48	
FBC 9	A5D1009	9	1500	1375	1290	1310	365	930	12,4	4,9	48	
FBC 12	A5D1012	12	1760	1635	1550	1310	490	1240	13,6	5,4	48	
FBC 15	A5D1015	15	1700	1525	1445	1650	630	1520	13,1	5,4	50	
FBC 18	A5D1018	18	1990	1815	1735	1650	760	1920	12,9	5,1	50	
FBC 25	A5D1025	25	2280	2105	2025	1650	1000	2520	13,2	5,2	75	
FBC 35	A5D1035	35	1900	1705	1605	2270	1450	3610	13,6	5,5	115	
FBC 50	A5D1050	50	2430	2230	2130	2270	2050	5050	13,5	5,5	186	

Use
Secondary treatment of residential black water.
Low-load activated sludge treatment plants are to be installed downstream of the Imhoff tank to allow the drain of purified water directly into a surface watercourse, without the risk of polluting the environment.

Operation
The active sludge biological process refers to a type of aerobic treatment conducted by aeration of the wastewater in a biological reactor in the presence of a microbial population (biomass). In activated sludge plants, the bacterial populations, constituted by numerous microorganisms, are produced continuously within the reactor following the biochemical reactions of degradation of organic carbon and nutrient utilization, resulting in the synthesis of new cellular material. The activated sludge plants are equipped with blowers that increase the presence of oxygen inside them thereby increasing the capacity of the degradation of the organic load by aerobic bacteria. In fact, these bacteria exploit the oxygen to consume the biodegradable material, and the greater the presence of oxygen, the greater is the ability to "consume" the biodegradable organic material inside the tanks. Low Load activated sludge plants are designed for volume not exceeding 0.5 (Cv < 0.5 BOD / m^3) and daily organic volume not exceeding 48 g/ P.E. The low-load activated sludge plants are equipped with internal sedimentation tank to separate the purified effluent from the activated sludge that will accumulate in the digester.

Maintenance
For the correct management of the FBC and to achieve the required purification results, please follow these guidelines:
- Regularly inspect the FBC to check that there is no gross material received accidentally to clog the pipes;
- Regularly check that no anomalies have occurred to the electrical panel if present;
- Verify that the diaphragm blower works properly, that is, movement must be observed in the volume of oxidation coinciding with the operating time;
- Every six months carry out the removal of excess sludge. Such removal must be carried out by a specialized company;
- As provided for by the Consolidated Act on Water (Legislative Decree 152/06 as amended), and suggested by the normal hygiene practice, periodically inspect and wash the inspection well.

Specification Item
The activated sludge purification unit for secondary treatment of residential wastewater manufactured in rotational polyethylene, in a single structure, free of joints and with reinforcement plate, and equipped with inlet and outlet holes, a sedimentation chamber, a digestion tank and inspection and sampling lids. Suitable for underground installation. The system must be equipped with blower and micro-bubbles diffuser, according to the plant specifications. The low-load activated sludge treatment plant has been designed in compliance with the indications given by experience, in particular, it has a retention time in the treatment stage of approximately 22 hours and the indications summarised below:

PROJECT PARAMETERS		
Water supply per P.E.	lt/d	200
Average flow (Q24) per P.E.	lt/h	8,3
Peak flow (Qp) per P.E.	lt/h	20
Specific organic load	gr BOD_5/P.E.x d	42
Concentration of the biodegradable fraction	mg/l	240
COD/BOD_5		1,67-2,2
Total daily nitrogen load per P.E.	kg/P.E.x d	<0,012
Total surfactant concentration	mg/l	<15
Concentration of oils and fats	mg/l	<10
Retention time in the treatment stage	h	22 c.a
Air flow supplied to the process per P.E.	m^3/h	0,45
Oxygen fed to the system per P.E.	m^3/h	0,09

Figure 5
System composed of DG, IMHOFF, FBC models for domestic use, with drain into watercourses

FOT

TOTAL OXIDATION BIOLOGICAL TREATMENT PLANTS

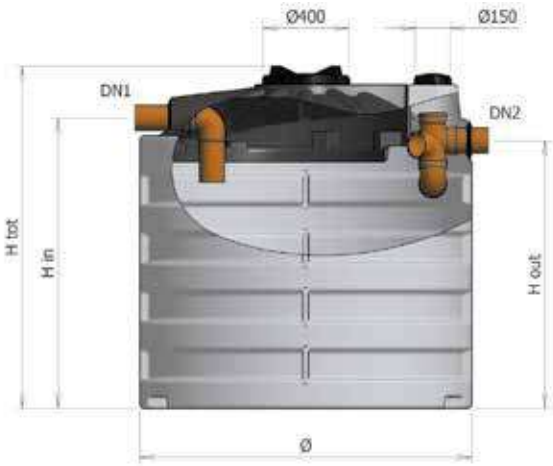

Not for drinking water

Model for underground only

Handling by forklift

Reference Standards
Legislative Decree N ° 152/2006
UNI EN 12566-3

WARRANTY: 2 YEARS

MODEL	CODE	POPULATION EQUIVALENT	HEIGHT H tot	HEIGHT H in	HEIGHT H out	DIAMETER Ø	DIAMETER OF PIPES Ø	TOT VOLUME	RETENTION TIME	BLOWER POWER	Notes
		P.E.	mm	mm	mm	mm	mm	L	h	W	
FOT 6	A5D2006	6	1240	1030	935	1310	110	985	29,7	48	
FOT 9	A5D2009	9	1500	1290	1195	1310	110	1295	31,2	48	
FOT 12	A5D2012	12	1760	1550	1455	1310	110	1730	29,8	50	
FOT 15	A5D2015	15	1700	1445	1330	1650	125	2150	32,4	50	
FOT 18	A5D2018	18	1990	1735	1620	1650	125	2680	32,3	75	
FOT 25	A5D2025	25	2280	2025	1910	1650	125	3520	32,6	95	
FOT 35	A5D2035	35	1900	1605	1475	2270	160	5060	30,5	186	
FOT 50	A5D2050	50	2430	2130	2000	2270	160	7100	31,7	225	

Use
Secondary treatment of residential black water.
Total oxidation biological treatment plants are the right equipment to achieve a high level of purification in wastewater generated in restaurants, hotels, camping and houses without sewer connections. Total oxidation biological treatment plants can be installed directly downstream of the degreaser to allow the drain of purified water directly into a watercourse, without the risk of polluting the environment. An Imhoff or ST sedimentation tank are installed downstream of the plant with a system (electric pump or airlift) which recirculates the sludge within the FOT.

Operation
The active sludge biological process refers to a type of aerobic treatment conducted by aeration of the wastewater in a biological reactor in the presence of a microbial population (biomass). In activated sludge plants, the bacterial populations, constituted by numerous microorganisms, are produced continuously within the reactor following the biochemical reactions of degradation of organic carbon and nutrient utilization, resulting in the synthesis of new cellular material. The activated sludge plants are equipped with blowers that increase the presence of oxygen inside them thereby increasing the capacity of the degradation of the organic load by aerobic bacteria. In fact, these bacteria exploit the oxygen to consume the biodegradable material, and the greater the presence of oxygen, the greater is the ability to "consume" the biodegradable organic material inside the tanks. Total oxidation biological treatment plants are designed for volume not exceeding 0.25 (Cv < 0.25 BOD/m^3) and daily organic volume not exceeding 60 g/P.E. The total oxidation biological treatment plant does not include the inner decanter (sedimentation chamber) as the high flow of oxygen permits the total oxidation of sludge, but a sedimentation is necessary through Imhoff or ST tank with appropriate system (electric pump or air lift) which will re-circulate the sludge within the FOT.

Maintenance
For the correct management of the FOT plant and to achieve the required purification results, please follow these guidelines:
- Regularly inspect the FOT to check that there is no gross material received accidentally to clog the pipes;
- Regularly check that no anomalies have occurred to the electrical panel if present;
- Verify that the diaphragm blower works properly, that is, movement must be observed in the volume of oxidation coinciding with the operating time;
- Every six months carry out the removal of excess sludge. Such removal must be carried out by a specialized company;
- As provided for by the Consolidated Act on Water (Legislative Decree 152/06 as amended), and suggested by the normal hygiene practice, periodically inspect and wash the inspection well;

Specification Item
Total oxidation biological treatment plants for the secondary treatment of residential wastewater manufactured in rotational polyethylene, in a single structure, free of joints and with reinforcement plate, and equipped with inlet and outlet holes, a digestion tank and inspection and sampling lids. Suitable for underground installation. The system must be equipped with blower and micro-bubbles diffuser, according to the plant specifications. The low-load activated sludge treatment plant has been designed in compliance with the indications given by experience, in particular, it has a retention time in the treatment stage of approximately 22 hours and the indications summarised below:

PROJECT PARAMETERS		
Water supply per P.E.	lt/d	200
Average flow (Q24) per P.E.	lt/h	8,3
Peak flow (Qp) per P.E.	lt/h	20
Specific organic load	gr BOD_5/P.E.x d	42
Concentration of the biodegradable fraction	mg/l	240
COD/BOD_5		1,67-2,2
Total daily nitrogen load per P.E.	kg/P.E.x d	<0,012
Total surfactant concentration	mg/l	<15
Concentration of oils and fats	mg/l	<10
Retention time in the treatment stage	h	22 c.a
Air flow supplied to the process per P.E.	m^3/h	0,45
Oxygen fed to the system per P.E.	m^3/h	0,09

Figure 6
System composed of DG, IMHOFF, FOT models for domestic use, with drain into watercourses

FPAI

AIR BLOWN AEROBIC TRICKLING FILTERS WITH DRAIN INTO WATERCOURSE

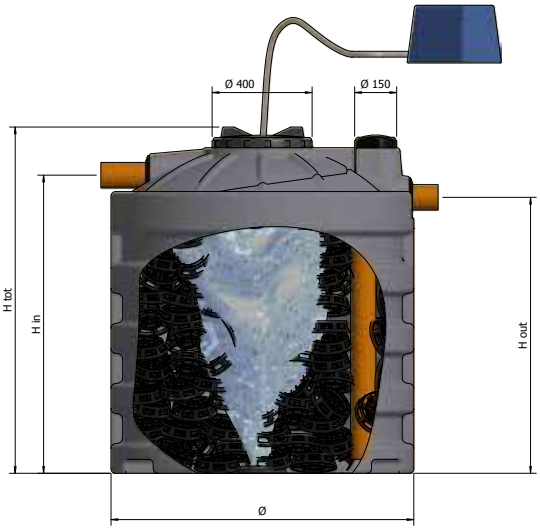

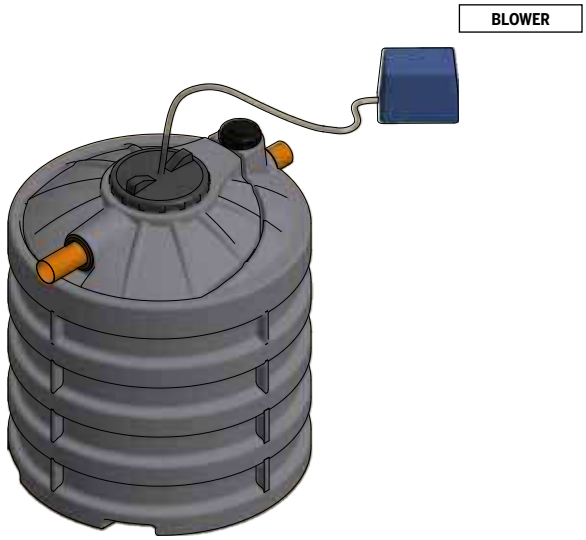

Not for drinking water

Model for underground only

Handling by forklift

Reference Standards
Legislative Decree N ° 152/2006
UNI EN 12566-3

WARRANTY: 2 YEARS

MODEL	CODE	POPULATION EQUIVALENT	DAILY FLOW	PEAK FLOW	ORGANIC INLET LOAD PER DAY BOD_5	VOLUMES OF TOTAL DIMENSIONS	PERCOLATOR VOLUME Ø	HEIGHT H tot	HEIGHT H in	HEIGHT H out	BLOWER POWER	DIAMETER OF PIPES Ø	Notes
		P.E.	m^3/g	m^3/h	Kg/g	m^3	mm	mm	mm	mm	Watt	mm	
FPAI 6	A5B3006	6	1,2	0,12	0,252	1,67	1310	1240	1030	935	48	110	
FPAI 9	A5B3009	9	1,8	0,18	0,378	2,02	1310	1500	1290	1195	48	110	
FPAI 12	A5B3012	12	2,4	0,24	0,504	2,37	1310	1760	1550	1455	48	110	
FPAI 15	A5B3015	15	3	0,3	0,63	3,63	1650	1700	1445	1330	50	125	
FPAI 18	A5B3018	18	3,6	0,36	0,756	4,25	1650	1990	1735	1620	50	125	
FPAI 25	A5B3025	25	5	0,5	1,05	4,87	1650	2280	2025	1910	75	125	
FPAI 35	A5B3035	35	7	0,7	1,47	7,69	2270	1900	1605	1475	115	160	
FPAI 50	A5B3050	50	10	1	2,1	9,83	2270	2430	2130	2000	186	160	

Use
Secondary treatment of residential black water.
Air blown aerobic trickling filters are to be installed downstream of the Imhoff tank to allow the drain of purified water directly into a surface watercourse, without the risk of polluting the environment.

Operation
The air blown percolating filter is a biological purification system, which consists of a tank containing plastic random fill media, fine bubble diaphragm air diffuser and linear diaphragm blower. The clarified water from the Imhoff tank flow into the aerobic percolating filter; these filter through the fill media forming a layer of microbial slime (biofilm). In this way, the contact surface between the biofilm and the aerobic microorganisms increases and thus the exposure of the the biodegradable material to microorganisms increases. The aerobic environment is ensured by the linear diaphragm blower that, connecting to the tubular fine bubble diaphragm air diffuser on the bottom of the container, ensures the oxygenation of the system. These aerobic bacteria (that consume oxygen for their growth) adhere to the random fill media and they feed on the organic substances contained in wastewater, purifying it.

Maintenance
For the correct management of the FPAI and to achieve the required purification results, please follow these guidelines:
- Regularly inspect the FPAI to check that there is no gross material received accidentally to clog the pipes;
- Regularly check that no anomalies have occurred to the electrical panel if present;
- Verify that the blower works properly, that is, movement must be observed in the volume of oxidation coinciding with the operating time;
- With the passing of time, the organic substances, some mineralized, accumulate in the bottom of the tank or between the interstices of the random fill media, and the functionality of the system can reduce. It is, therefore, necessary to wash the random fill media with water under pressure, aspirating the washing water at the same time. The backwash of the random fill media and the removal of mineralized sludge should be carried out at least once every five years. Such removal must be carried out by a specialized company;
- As provided for by the Consolidated Act on Water (Legislative Decree 152/06 as amended), and suggested by the normal hygiene practice, periodically inspect and wash the inspection well.

Specification Item
Air blown aerobic percolating filter manufactured in rotational polyethylene for secondary treatment of residential black water. Monolithic structure,, free of joints and reinforcement, with entry and exit hole, with plastic random fill media with a specific surface area of 120 m^2/m^3, linear diaphragm blower connected to one or more air tubular diffusers and inspection and sampling lids. Suitable for underground installation. The aerobic environment is ensured by the linear diaphragm blower (or side channels depending on the model) that, connecting to the tubular fine bubble diaphragm air diffuser on the bottom of the container ensures the oxygenation of the system.
The plant has been designed in compliance with the indications given by experience, and in particular, it has an oxidation time of about 15 hours and an airflow supplied of approximately 0.45 m^3/h for Population Equivalent.

PROJECT PARAMETERS		
Water supply per P.E.	lt/d	200
Average flow (Q24) per P.E.	lt/h	8,3
Peak flow (Qp) per P.E.	lt/h	20
Specific organic load	gr BOD_5/P.E. x d	42
Concentration of the biodegradable fraction	mg/l	240
COD/BOD_5		1,67-2,2
Total daily nitrogen load per P.E.	kg/P.E. x d	<0,012
Total surfactant concentration	mg/l	<15
Concentration of oils and fats	mg/l	<10
Specific surface of the random fill media	m^2/m^3	120
Retention time in the treatment stage	h	approx. 15
Air flow supplied to the process per P.E.	m^3/h	0,45
Oxygen fed to the system per P.E.	m^3/h	0,09

FPAI SUPERIOR

AIR BLOWN AEROBIC TRICKLING FILTERS WITH DRAIN INTO THE GROUND

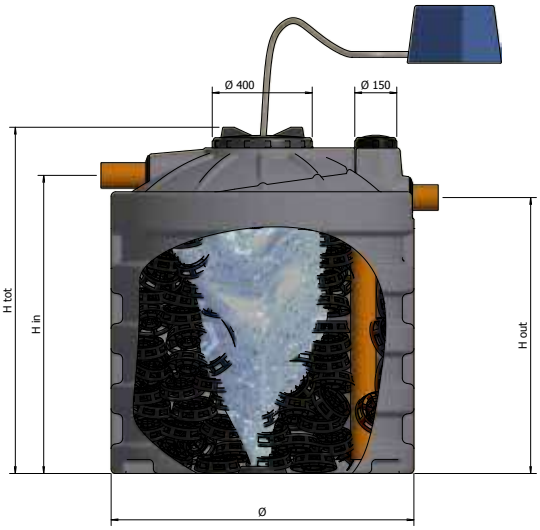

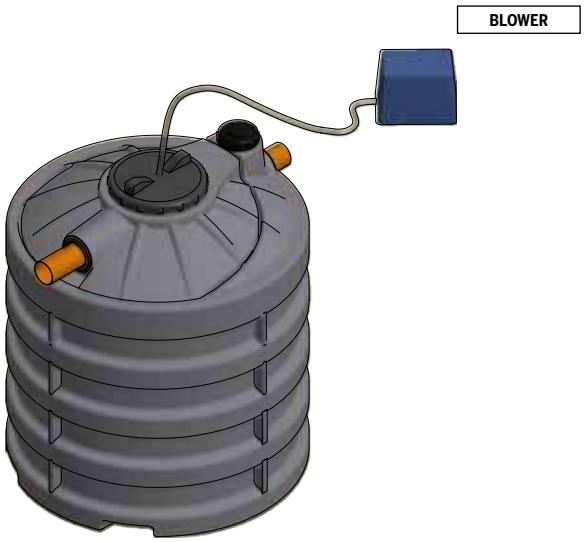

Not for drinking water

Model for underground only

Handling by forklift

Reference Standards
Legislative Decree N ° 152/2006
UNI EN 12566-3

WARRANTY: 2 YEARS

MODEL	CODE	POPULATION EQUIVALENT	DAILY FLOW	PEAK FLOW	ORGANIC INLET LOAD PER DAY BOD_5	VOLUMES OF TOTAL DIMENSIONS	PERCOLATOR VOLUME Ø	HEIGHT H tot	HEIGHT H in	HEIGHT H out	BLOWER POWER	DIAMETER OF PIPES Ø	Notes
		P.E.	m^3/g	m^3/h	Kg/g	m^3	mm	mm	mm	mm	Watt	mm	
FPAI SUPERIOR 3	A5B4003	3	0,6	0,06	0,13	1,67	1310	1240	1030	935	48	110	
FPAI SUPERIOR 4	A5B4004	4	0,8	0,08	0,17	2,02	1310	1500	1290	1195	48	110	
FPAI SUPERIOR 6	A5B4006	6	1,2	0,12	0,25	2,37	1310	1760	1550	1455	48	110	
FPAI SUPERIOR 7	A5B4007	7	1,4	0,14	0,29	3,63	1650	1700	1445	1330	48	110	
FPAI SUPERIOR 9	A5B4009	9	1,8	0,18	0,38	4,25	1650	1990	1735	1620	48	110	
FPAI SUPERIOR 12	A5B4012	12	2,4	0,24	0,50	4,87	1650	2280	2025	1910	50	110	
FPAI SUPERIOR 17	A5B4017	17	3,4	0,34	0,71	7,69	2270	1900	1605	1475	75	125	
FPAI SUPERIOR 25	A5B4025	25	5	0,50	1,05	9,83	2270	2430	2130	2000	95	125	

Use
Secondary treatment of residential black water.
Air blown aerobic trickling filters are to be installed downstream of the Imhoff tank to allow the drain of purified water directly into the ground, without the risk of polluting the environment.

Operation
The air blown percolating filter is a biological purification system consists of a tank containing plastic random fill media, fine bubble diaphragm air diffuser and linear diaphragm blower. The clarified water from the Imhoff tank flow into the aerobic percolating filter; these filter through the fill media forming a layer of microbial slime (biofilm). In this way, the contact surface between the biofilm and the aerobic microorganisms increases and thus the exposure of the biodegradable material to microorganisms increases. The aerobic environment is ensured by the linear diaphragm blower that, connecting to the tubular fine bubble diaphragm air diffuser on the bottom of the container, ensures the oxygenation of the system. These aerobic bacteria (that consume oxygen for their growth) adhere to the random fill media and they feed on the organic substances contained in wastewater, purifying it.

Maintenance
For the correct management of the FPAI SUPERIOR and to achieve the required purification results, please follow these guidelines:

- Regularly inspect the FPAI SUPERIOR to check that there is no gross material received accidentally to clog the pipes;
- Regularly check that no anomalies have occurred to the electrical panel if present;
- Verify that the diaphragm blower works properly, that is, movement must be observed in the volume of oxidation coinciding with the operating time;
- With the passing of time, the organic substances, some mineralized, accumulate in the bottom of the tank or between the interstices of the random fill media, and the functionality of the system can reduce. It is, therefore, necessary to wash the random fill media with water under pressure, aspirating the washing water at the same time. The backwash of the random fill media and the removal of mineralized sludge should be carried out at least once every five years. Such removal must be carried out by a specialized company:
- As provided for by the Consolidated Act on Water (Legislative Decree 152/06 as amended), and suggested by the normal hygiene practice, periodically inspect and wash the inspection well.

Specification Item
Air blown aerobic percolating filter manufactured in rotational polyethylene for secondary treatment of residential black water. Monolithic structure, free of joints and reinforcement, with entry and exit hole, with plastic random fill media with a specific surface area of 120 m^2/m^3, linear diaphragm blower connected to one or more air tubular diffusers and inspection and sampling lids. Suitable for underground installation. The aerobic environment is ensured by the linear diaphragm blower (or side channels depending on the model) that, connecting to the tubular fine bubble diaphragm air diffuser on the bottom of the container, ensures the oxygenation of the system.
The plant has been designed in compliance with the indications given by experience, and in particular, it has an oxidation time of about 15 hours and an airflow supplied of approximately 0.45 m^3/h for Population Equivalent.

PROJECT PARAMETERS		
Water supply per P.E.	lt/d	200
Average flow (Q24) per P.E.	lt/h	8,3
Peak flow (Qp) per P.E.	lt/h	20
Specific organic load	gr BOD_5/P.E. x d	42
Concentration of the biodegradable fraction	mg/l	240
COD/BOD_5		1,67-2,2
Total daily nitrogen load per P.E.	kg/P.E.x d	<0,012
Total surfactant concentration	mg/l	<15
Concentration of oils and fats	mg/l	<10
Specific surface of the random fill media	m^2/m^3	120
Retention time in the treatment stage	h	approx. 15
Air flow supplied to the process per P.E.	m^3/h	0,45
Oxygen fed to the system per P.E.	m^3/h	0,09

Figure 7
Plant for domestic use, drain into the ground composed of the DG, IMHOFF, 3) FPAI SUPERIOR models

SUBI

SUB-IRRIGATION PLANTS FOR DRAIN INTO THE GROUND

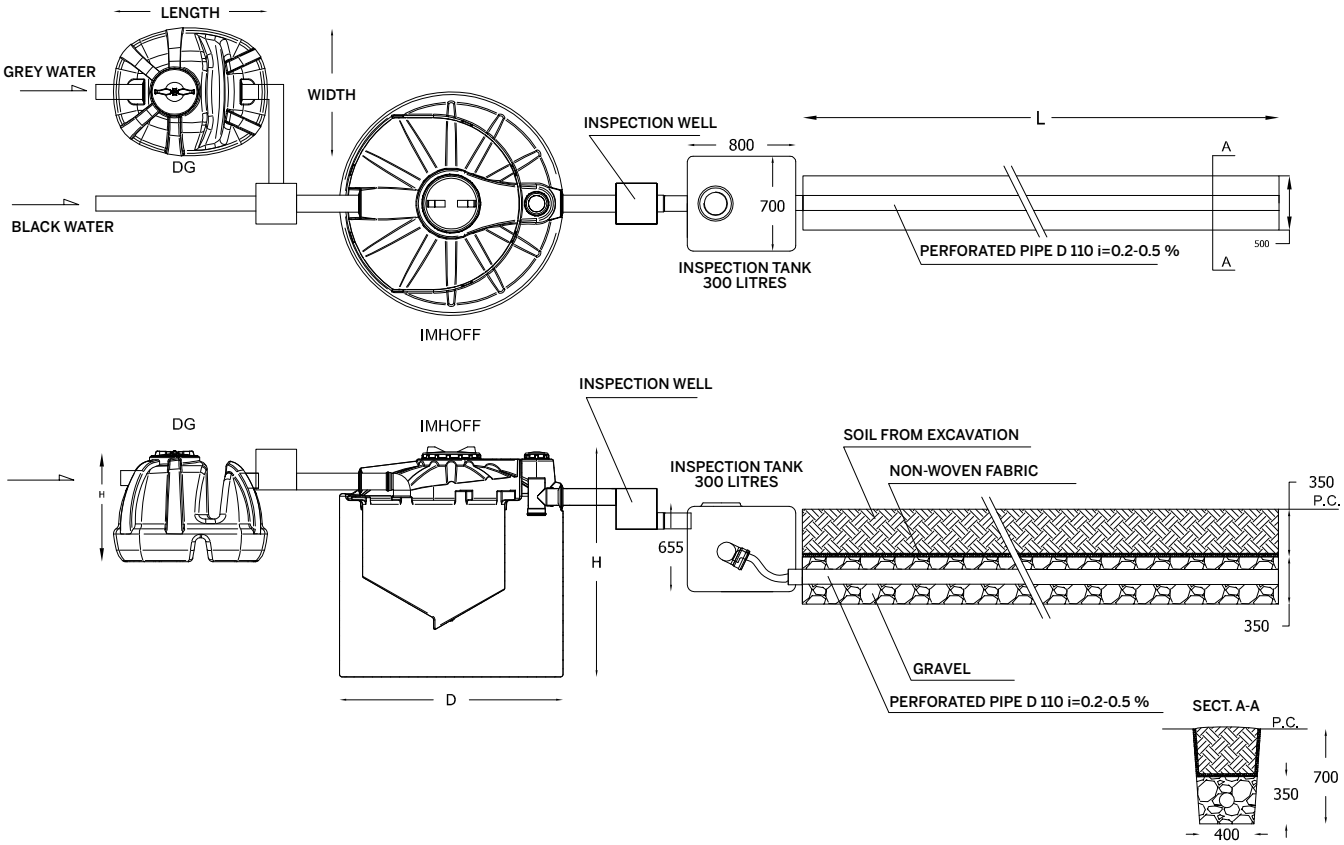

Not for drinking water

Model for underground only

Handling by forklift

Reference Standards
Legislative Decree N 152/2006
UNI EN 12566-3

WARRANTY: 2 YEARS

MODEL	CODE	POPULATION EQUIVALENT	DAILY FLOW	GREASE TRAP		IMHOFF			Notes
				model	volume	model	digester	clarifier	
		P.E.	m^3/g	DG / DG-PRO	litres	IMHOFF	litres	litres	
SUBI 6	A5I0006	6	1,2	5	95	6	730	255	
SUBI 9	A5I0009	9	1,8	10	190	9	930	365	
SUBI 12	A5I0012	12	2,4	15	285	12	1240	490	
SUBI 15	A5I0015	15	3	15	285	15	1520	630	
SUBI 18	A5I0018	18	3,6	20	380	18	1920	760	
SUBI 25	A5I0025	25	5	45	853	25	2520	1000	
SUBI 35	A5I0035	35	7	45	853	35	3610	1450	
SUBI 50	A5I0050	50	10	45	853	50	5050	2050	

The price includes flush tank and the supply of a kit consisting of a perforated pipe and a TNT (Non-woven fabric) provided per linear metre considering a standard type of soil (fine sand, lightweight material) according to the table on page 43. For other types of soil, please contact our technical department: aquapura@elbi.it

Use
Secondary treatment of residential black water with drain into the ground according to Table 4, Legislative Decree 152/06, Annex 5. The sub-irrigation system is a complete system for drain into the ground composed of Grease Trap, Imhoff, Flush Tank and Sub-irrigation.

Operation
The Subi biological treatment system, complete with grease trap and septic tank is used downstream of the primary treatment through a grease trap where a first separation takes place by flotation of fats and oils in the water from sinks, showers, kitchens (grey water) except those of the wc (black water), and through the Imhoff which consists of two compartments, the upper one of sedimentation, where the bodies with a density higher than that of water will tend to settle and a lower compartment (digester) where settled elements will be digested by anaerobic bacteria. Subsurface irrigation is effectively made up from the flush tank, which will cause the wastewater to be sent intermittently inside the drainage pipes at a certain speed so that the drainage pipes can be affected by the flow for their entire length. The wastewater, once in the drainage pipes, will be permeated using filtration to the surrounding ground where it will undergo purification thanks to the same bacteria naturally present in it.

Maintenance
For the correct management of the Subi and to achieve the required purification results, please follow these guidelines:

- Regularly inspect the grease trap, the Imhoff tank and the flush tank to check that there is no gross material received accidentally to clog the pipes;
- Remove the excess sludge on a regular basis from the Imhoff and the grease trap. The removal of sludge must be carried out by a specialized company;
- Check the flush tank and test the operation (remove the sludge accumulated if necessary);
- As provided for by the Consolidated Act on Water (Legislative Decree 152/06 as amended), and suggested by the normal hygiene practice, periodically inspect and wash the inspection well.

Specification Item
The Subi biological treatment system is a purification system used downstream of the primary treatment and Imhoff septic tank, constructed with a corrugated container for greater underground resistance and walkable ribbed maintenance lid made of 100% recyclable polyethylene with rotational moulding technology. The systems are complete with inlet and outlet waste piping and relative gaskets, which guarantee a perfect Gasket. A flush tank made of 100% recyclable polyethylene with rotational moulding technology with underground resistance and completed with a perforated pipes system with non-woven fabric suitable for the dispersion of the wastewater into the ground.

NOTE *The pipe lengths and consequently the m² of the non-woven fabric, must be requested later after a detailed analysis by an authorised geologist who will be obliged to know the hydrogeological characteristics of the soil on site.*
Here is a table of the pipe length depending on the type of soil (taken from: Annex V the Interministerial Committee resolution of 04/02/77).

PIPE LENGTH DEPENDING ON THE TYPE OF SOIL

TYPE	SOIL TYPES	L (m) /P.E.
1 (STANDARD)	FINE SAND, LIGHT FILLING MATERIAL	2
2	COURSE SAND AND GRAVEL	3
3	FINE SAND WITH CLAY	5
4	CLAY WITH A LITTLE SAND	10
5	DENSE CLAY	not suitable

Figure 8
Plant for domestic use, drain into the ground composed of the DG, IMHOFF, 2) SUBI models

DRENASUB

DRAINED SUB-IRRIGATION PLANTS FOR DRAIN INTO THE GROUND

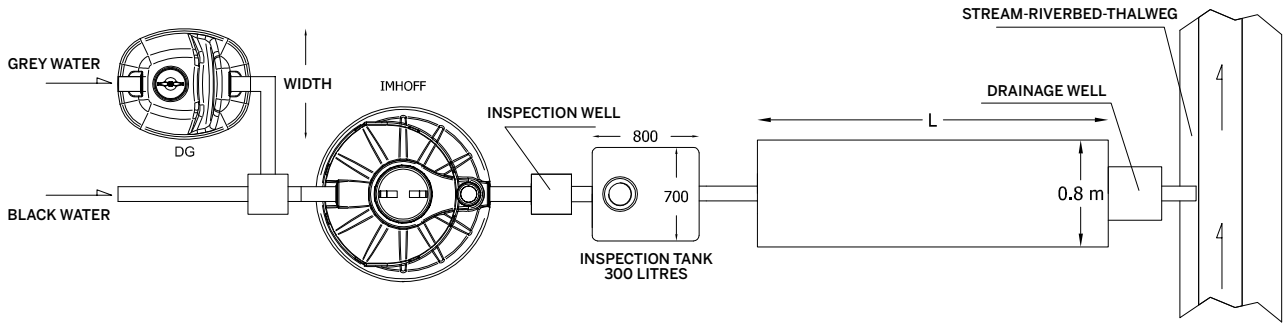

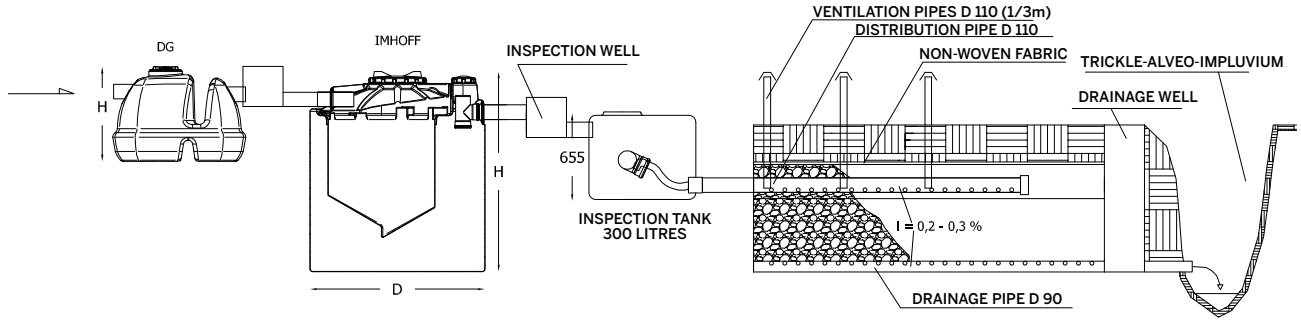

Not for drinking water

Model for underground only

Handling by forklift

Reference Standards
Legislative Decree N 152/2006
UNI EN 12566-3

WARRANTY: 2 YEARS

MODEL	CODE	POPULATION EQUIVALENT	DAILY FLOW	GREASE TRAP		IMHOFF			PIPING			Notes
				model		model	digester	clarifier	dispersant	draining	T.N.T.	
		P.E.	m³/g	DG / DG-PRO	litres	IMHOFF	litres	litres	m lin.	m lin.	m²	
DRENASUB 6	A5U0006	6	1,2	5	95	6	730	255	7	12	12	
DRENASUB 9	A5U0009	9	1,8	10	190	9	930	365	13	18	18	
DRENASUB 12	A5U0012	12	2,4	15	285	12	1240	490	19	24	24	
DRENASUB 15	A5U0015	15	3	15	285	15	1520	630	25	30	30	
DRENASUB 18	A5U0018	18	3,6	20	380	18	1920	760	31	36	36	
DRENASUB 25	A5U0025	25	5	45	853	25	2520	1000	45	50	50	
DRENASUB 35	A5U0035	35	7	45	853	35	3610	1450	65	70	70	
DRENASUB 50	A5U0050	50	10	45	853	50	5050	2050	95	100	100	

Use
Secondary treatment of residential black water with drain into the ground according to Table 4, Legislative Decree 152/06, Annex 5. The drained sub-irrigation system is a complete system for drain into the ground composed of Degreaser, Imhoff, and drained sub-irrigation.

Operation
Drenasub is a drained subsurface irrigation system used downstream of the primary treatment and the Imhoff septic tank, constructed of a corrugated container for greater underground resistance and walkable ribbed maintenance lid made of 100% recyclable polyethylene with rotational moulding technology. The systems are complete with inlet and outlet waste piping and relative gaskets, which guarantee a perfect seal. A flush tank made 100% recyclable polyethylene of rotational moulding technology with underground resistance and a complete perforated pipes system with non-woven fabric suitable for the dispersion of the wastewater into the ground.

Maintenance
For the correct management of Drenasub and to achieve the required purification results, please follow these guidelines:
- Regularly inspect the grease trap and the Imhoff tank to check that there is no gross material received accidentally to clog the pipes;
- Remove the excess sludge on a regular basis from the Imhoff and the grease trap. Such removal must be carried out by a specialized company;
- As provided for by the Consolidated Act on Water (Legislative Decree 152/06 as amended), and suggested by the normal hygiene practice, periodically inspect and wash the inspection well.

Specification Item
The Drenasub biological treatment system, complete with grease trap and septic tank is installed downstream of the primary treatment through a grease trap where a first separation takes place by flotation of fats and oils in the water from sinks, showers, kitchens (grey water) except those of the wc (black water). With Imhoff which consists of two compartments, the upper one of sedimentation, where the bodies with a higher density than that of water will tend to settle and a lower compartment (digester) where settled elements will be digested by anaerobic bacteria. The subsurface irrigation is composed of the flush tank of 300 lt and perforated pipe (DN 110 mm for the dispersing pipe and DN 90 mm for the drainage pipe) of non-woven fabric.
On the gravel surface where the wastewater is filtered, you will have the establishment of aerobic biomass that will metabolize organic substances in solution. Aerobic conditions will be created with the insertion of the ventilation pipes.
The filtered wastewater will be conveyed to the drainage pipe towards a drainage well and then to the receptor body (stream, watercourse or river basin).

Laying of the dispersant pipe and the drainage pipe
Dig a trench of 110 cm in height and 60 cm in width and the length equal to the Elbi drained sub-irrigation model (Length equal to the length of the drainage pipe).
Insert a layer of 10 cm of clay or geomembrane in the bottom of the trench.
Place a layer of 20 cm of crushed stone or gravel of 6-8 cm in size where the draining pipe should be "buried" (D 110 mm) with a gradient of 0.2-0.3%.
Place a second layer h = 40 cm where a layer of gravel/crushed stone of 3/6 cm in size will be placed.
Place a further layer of about 20 cm of thick gravel of 6-8 cm in size where the dispersant pipe will be buried.
Insert the plug at the end of the dispersant pipe. In this last layer, the pipe aerators should be positioned (one every 3 metres).
Lay the non-woven fabric on this last layer and cover up completely with the excavated soil (the non-woven fabric prevents the ground above from falling into the interstices of the gravel so that later filtration of the wastewater is not prevented).

NOTE *subsurface irrigation is a good alternative to the drained subsurface irrigation in case IMPERMEABLE soils are present in the site (e.g. Compact clay).*
The installation location of the plant is also important, taking into account that:
- *the distance of the bottom of the trench excavation is > 1 metre from the maximum groundwater level;*
- *pipes for drinking water are > 30 metres distant from tanks;*

Given the circumstances set out in this note, it is, therefore, essential that the determination of the soil and the hydrology of the area be carried out by an authorised geologist.

FITO

PHYTOPURIFICATION PLANTS FOR DRAIN INTO THE GROUND

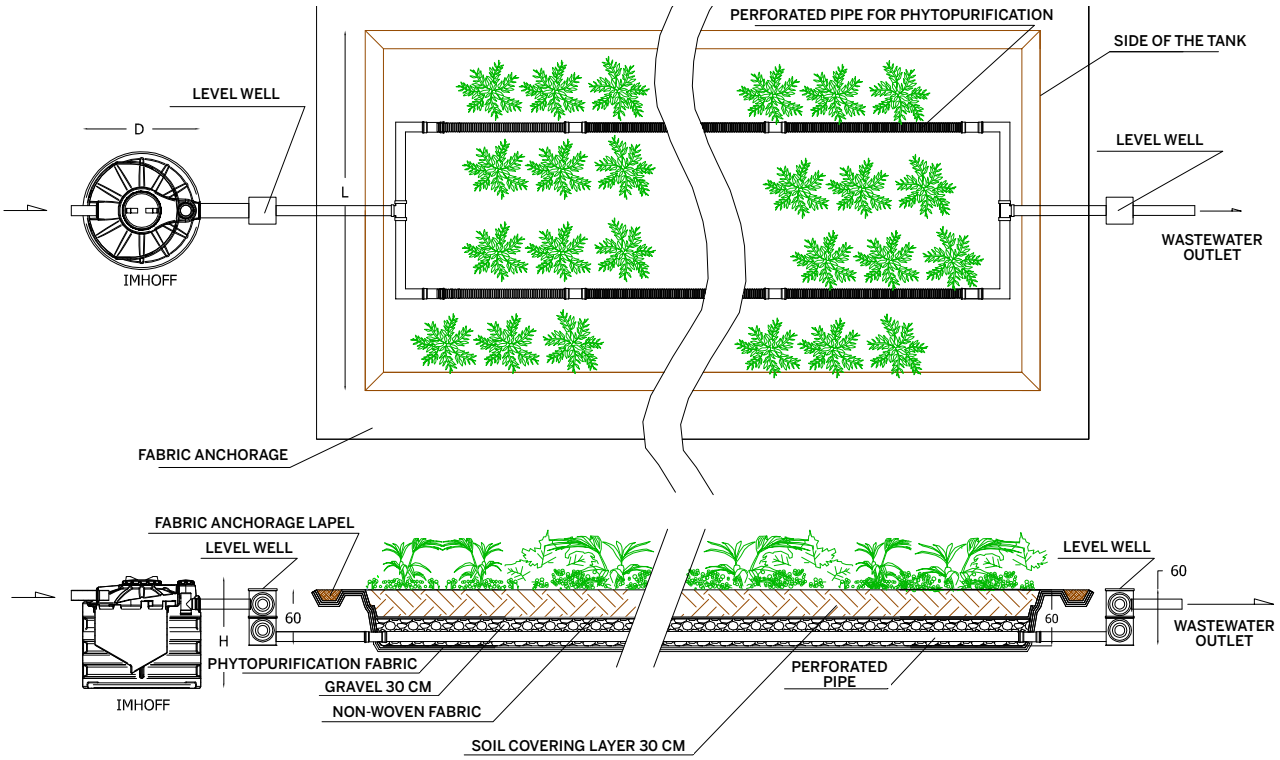

Not for drinking water

Model for underground only

Handling by forklift

Reference Standards
Legislative Decree N 152/2006
UNI EN 12566-3

WARRANTY: 2 YEARS

MODEL	CODE	POPULATION EQUIVALENT	DAILY FLOW	PEAK FLOW	IMHOFF			PHYTOPURIFICATION BASIN			Notes
					model	digester	clarifier	basin area	tank size	DN pipes	
		P.E.	m³/g	m³/g	IMHOFF	litres	litres	m²	m	mm	
FITO 6	A5W0006	6	1,2	0,12	6	730	255	30	4 X 7,5 X 0,6	110	
FITO 9	A5W0009	9	1,8	0,18	9	930	365	45	5 X 9 X 0,6	110	
FITO 12	A5W0012	12	2,4	0,24	12	1240	490	60	5 X 12 X 0,6	110	
FITO 15	A5W0015	15	3	0,3	15	1520	630	75	5 X 15 X 0,6	110	
FITO 18	A5W0018	18	3,6	0,36	18	1920	760	90	5 X 18 X 0,6	110	
FITO 25	A5W0025	25	5	0,5	25	2520	1000	125	5 X 25 X 0,6	110	
FITO 35	A5W0035	35	7	0,7	35	3610	1450	175	7 X 25 X 0,6	110	
FITO 50	A5W0050	50	10	1,0	50	5050	2050	250	10 X 25 X 0,6	110	

Use
Secondary treatment of residential black water with drain into the ground according to Table 4, Legislative Decree 152/06, Annex 5. The phytopurification plant is a complete system for drain into the ground composed of Imhoff and a sandwich of sheets for the phytopurification basin.

Operation
Phytopurification is a system of natural purification of domestic, agricultural and industrial wastewater, which reproduces the typical self-purification principle of aquatic environments and wetlands.
Purification is carried out through the combined action between the permeable substrate, plants, wastewater and microorganisms. The mechanisms of removal of pollutants (organic matter, nitrogen, phosphorus and pathogens) are similar to those of trickling filters, and are physical, chemical and biological.
The wastewater coming from utilities are first conveyed into the Imhoff tank where, thanks to the sedimentation system present, there is the first removal of all those substances, which due to their specific weight tend to sediment in the water. Sedimented substances will be conveyed to the digesting compartment below, where they will undergo digestion by anaerobic bacteria. The waters coming out of the Imhoff through the inlet tank are distributed to the basin; downstream of the basin there is an outlet tank complete with overflow created in such a way that the wastewater is retained in the basin and any excess water, mainly due to weather events, is disposed of due to the overflow.

Maintenance
For the correct management of Fito and to achieve the required purification results, please follow these guidelines:

- Ensure the good health of vegetation planted;
- Regularly inspect the purifying chain components to check that there is no gross material received accidentally to clog the pipes;
- Regularly clean the Fito pipes;
- Regularly empty the Imhoff tank. The removal of sludge must be carried out by a specialized company;
- As provided for by the Consolidated Act on Water (Legislative Decree 152/06 as amended), and suggested by the normal hygiene practice, periodically inspect and wash the inspection well.

Specification Item
A complete system composed of 1 Imhoff tank and phytopurification basin suitable for treating domestic wastewater and confluent into surface water or soil designed considering an area of phytopurification of 5 m^2 per Population Equivalent. The phytopurification system is composed of 1 Imhoff tank made of 100% recyclable polyethylene, complete with wastewater inlet and outlet system and maintenance lid; 1 phytopurification basin composed of sandwich waterproof sheeting which is resistant to laying on various types of ground, complete with electro-welded sheath for the insertion of the wastewater inlet and outlet piping and guaranteeing the perfect hydraulic seal. The plant is also complete with perforated pipes for distribution of the wastewater, non-woven fabric and two wells that guarantee a constant hydraulic head inside the basin.

PROJECT PARAMETERS		
Basin area	m^2/a.e.	5

Figure 9
Plant for domestic use, drain into the ground composed of the DG, IMHOFF, 1) FITO models

EVAPO

EVAPOTRANSPIRATION PLANTS FOR DRAIN INTO THE GROUND

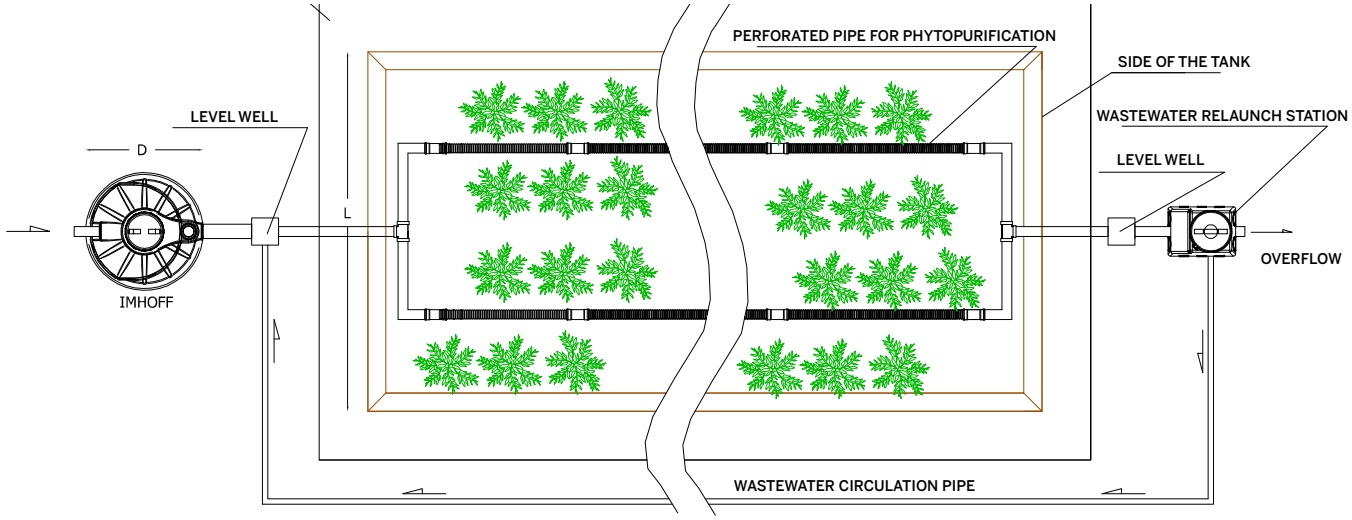

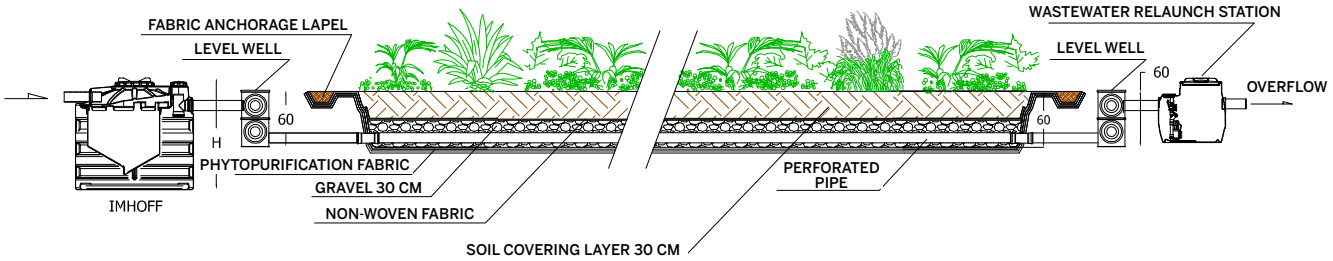

Not for drinking water

Model for underground only

Handling by forklift

Reference Standards
Legislative Decree N 152/2006
UNI EN 12566-3

WARRANTY: 2 YEARS

MODEL	CODE	POPULATION EQUIVALENT	DAILY FLOW	PEAK FLOW	IMHOFF			PHYTOPURIFICATION BASIN			Notes
					model	digester	clarifier	basin area	tank size	DN pipe	
		P.E.	m³/g	m³/g	IMHOFF	litres	litres	m²	m	mm	
EVAPO 6	A5W0E06	6	1,2	0,12	6	730	255	48	4 X 12 X 0,6	110	
EVAPO 9	A5W0E09	9	1,8	0,18	9	930	365	72	5 X 14,4 X 0,6	110	
EVAPO 12	A5W0E12	12	2,4	0,24	12	1240	490	96	5 X 19,2 X 0,6	110	
EVAPO 15	A5W0E15	15	3	0,3	15	1520	630	120	8 X 15 X 0,6	110	
EVAPO 18	A5W0E18	18	3,6	0,36	18	1920	760	144	8 X 18 X 0,6	110	
EVAPO 25	A5W0E25	25	5	0,5	25	2520	1000	200	8 X 25 X 0,6	110	

Use
Secondary treatment of residential black water with drain into the ground according to Table 4, Legislative Decree 152/06, Annex 5. The evapotranspiration plant is a complete system for drain into the ground composed of Imhoff and a sandwich of sheets for the evapotranspiration basin and wastewater recirculation station.

Operation
Evapotranspiration is a system of natural purification of domestic, agricultural and industrial wastewater, which reproduces the typical self-purification principle of aquatic environments and wetlands.
Purification is carried out through the combined action between the permeable substrate, plants, wastewater and microorganisms. The mechanisms of removal of pollutants (organic matter, nitrogen, phosphorus and pathogens) are similar to those of trickling filters, and are physical, chemical and biological.
The wastewater coming from the loads are conveyed in the primary Imhoff tank where, thanks to this system of sedimentation in it there is the first removal of all those substances, which by their specific weight tend to sediment in the water. Sedimented substances will be conveyed to the digesting compartment below where they will undergo digestion by anaerobic bacteria. The waters coming out of the Imhoff through the inlet tank are distributed to the basin. Within the basin, there are different types of "water greedy" plants/shrubs, which due to their characteristics and thanks to the dry climates where the system is installed enable the complete evapotranspiration of the wastewater. Downstream of the basin, there is an outlet tank complete with overflow created in such a way that a hydraulic head is retained in the basin that allows the constant presence of the wastewater at the height of the roots of the planted areas present in the basin. Downstream of the same, there is a revival in the head station of the facility that will allow the wastewater not evaporated and rainwater that has infiltrated to restart the cycle. The pumping station is equipped with an overflow drain that in turn, in the case of lack of electricity or power disconnection, would permit the wastewater to be drained into the surface body or the ground.

Maintenance
For the correct management of Evapo and to achieve the required purification results, please follow these guidelines:
- Ensure the good health of vegetation planted;
- Regularly inspect the purifying chain components to check that there is no gross material received accidentally to clog the pipes;
- Regularly clean the Evapo pipes;
- Regularly empty the Imhoff tank. The removal of sludge must be carried out by a specialized company;
- Inspect and drain the wastewater booster station whenever necessary;
- As provided for by the Consolidated Act on Water (Legislative Decree 152/06 as amended), and suggested by the normal hygiene practice, periodically inspect and wash the inspection well.

Specification Item
A complete system composed of 1 Imhoff tank and evapotranspiration basin suitable for treating domestic wastewater and confluent into surface water or soil designed considering an area of evapotranspiration of 8 m^2 per Inhabitant Equivalent.
The system is composed of 1 Imhoff tank made of 100% recyclable polyethylene, complete with wastewater inlet and outlet system and maintenance lid; 1 evapotranspiration basin composed of sandwich waterproof sheeting which is resistant to laying on various types of ground, complete with electro-welded sheath for the insertion of the wastewater inlet and outlet piping and guaranteeing the perfect hydraulic Seal. The plant is also complete with perforated pipes for distribution of the wastewater, non-woven fabric and two wells that guarantee a constant hydraulic head inside the basin. The supply also includes a pumping station complete with electric pump for re-launching the wastewater to the plant.

PROJECT PARAMETERS		
Basin area	m^2/a.e.	8

Figure 10
Plant for domestic use, drain into the ground composed of the DG, IMHOFF, 1) EVAPO models

WASTEWATER PLANT DATA SHEET

COMPANY

FULL NAME

ADDRESS NO

TOWN ZIP COUNTY

TEL. FAX E-MAIL

☐ PRIVATE ☐ BUSINESS ACTIVITY

PLANT LOCATION

ANY NOTES

.....

.....

SETTLEMENT TYPE

☐ DOMESTIC

No. of fixed inhabitants .....

☐ PRODUCTIVE/COMMERCIAL

No. of shower users .....

No. of toilets users .....

No. of total users .....

☐ RESTAURANT INDUSTRY

No. of place settings for lunch .....

No. of place settings for dinner .....

No. of total place settings .....

No. of employees .....

Daily water flow (lt/d) .....

Peak flow (lt/h) .....

PEAK FLOW (LT/H)

☐ SINGLE

☐ SEPARATE

FINAL DRAINAGE

☐ IN SURFACE WATER

☐ IN SEWER

☐ INTO THE GROUND

PROJECT TYPE

☐ NEW PLANT

☐ MODIFICATION OF EXISTING PLANT

In the case of existing plant, attach a brief description indicating the main relevant parameters (type of system, efficiency, project size, utilities)

LEVEL DIFFERENCE BETWEEN THE EXIT PIPE OF THE ENTRY POINT OF THE PLANT AND THE LEVEL OF THE COUNTRYSIDE cm .....

DIAMETER OF OUTPUT PIPE IN THE INPUT POINT IN THE PLANT cm .....

HEIGHT DIFFERENCE BETWEEN THE POINT OF ENTRY IN THE BODY RECEPTOR AND COUNTRY PLAN cm .....

ANY ATTACHMENTS

☐ PLANS (even outlined) ☐ ANALYSIS

N.B.: THE EQUIPMENT UPSTREAM AND DOWNSTREAM OF THE PLANT IS NOT OUR RESPONSIBILITY

RETURN THE FORM COUNTERSIGNED FOR CONFIRMATION OF PROJECT DATA DISCLOSED, BY, WHICH WE WILL DEVELOP OUR PURIFYING PROPOSAL, MAKING ANY ADJUSTMENTS AND/OR CORRECTIONS.
SEND FORM TO: aquapura@elbi.it / Fax 049.8841610

DATE ..... STAMP AND SIGNATURE .....

NOTES

WASTE FROM BUSINESS ACTIVITIES

Some businesses use significant amounts of water for their production activities, which they combine with biodegradable substances, chemicals and synthetic elements.
We are talking about business activities, such as:

- Farms
- Dairies
- Kennels
- Cellars
- Dry Cleaners
- Hairdressers
- Sports facilities

This wastewater produced must be cleaned before being re-released into the environment.
One way to use water resources in a responsible and ecological way, while at the same time saving on costs is definitely to prefer recycling to disposal, and then reuse whenever possible the treated wastewater for uses that do not require high-quality water

Different types of plants are proposed and carried out on commission by Elbi, depending on the wastewater to be purified.
It is possible to request information and an initial estimate of the product that best suits your needs by sending an email to aquapura@elbi.it with the following information:

WASTEWATER FROM COMMERCIAL ACTIVITIES DATA SHEET

COMPANY _____

FULL NAME _____

ADDRESS _____ **NO** _____

TOWN _____ **ZIP** _____ **COUNTY** _____

TEL. _____ **FAX** _____ **E-MAIL** _____

PLANT LOCATION _____

ANY NOTES

.....

AREA OF ACTIVITY

☐ Farms ☐ Kennels ☐ Dry Cleaners ☐ Sports facilities
☐ Dairies ☐ Cellars ☐ Hairdressers ☐ Other.....

Type and quantity of chemicals used .....

WATER CONSUMPTION

- Daily: ..... Litres
- Per year: ..... Litres
- In peak period: ..... Litres

Peak activity period
(wastewater discharge):

.....

Final wastewater drainage:

☐ Public sewer
☐ Surface water
☐ Soil

Other: .....

.....

.....

RETURN THE FORM COUNTERSIGNED FOR CONFIRMATION OF PROJECT DATA DISCLOSED, BY, WHICH WE WILL DEVELOP OUR PURIFYING PROPOSAL, MAKING ANY ADJUSTMENTS AND/OR CORRECTIONS.
SEND FORM TO: aquapura@elbi.it / Fax 049.8841610

DATE ..... STAMP AND SIGNATURE .....

RAINWATER TREATMENTS

COVERED AND UNCOVERED PAVED AREAS

DIS
SAND TRAP

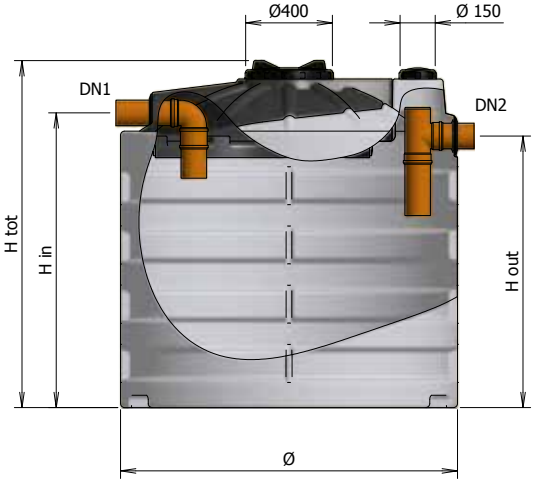

Not for drinking water

Model for underground only

Handling by forklift

Reference Standards
Legislative Decree N ° 152/2006

WARRANTY: 2 YEARS

MODEL	CODE	UNCOVERED AREA	COVERED AREA	CAPACITY	USEFUL VOLUME	SAND TRAP DIMENSIONS Ø x h	DIAMETER OF PIPES Ø	HEIGHT H in	HEIGHT H out	Notes
		m^2	m^2	L/s	litres	mm	mm	mm	mm	
DIS 370	A5S0370	370	740	2,0	853	1310 x 1240	125	1030	930	
DIS 500	A5S0500	500	1000	2,8	1150	1310 x 1500	125	1290	1190	
DIS 640	A5S0640	640	1280	3,5	1490	1310 x 1760	125	1550	1440	
DIS 940	A5S0940	940	1880	5,2	2170	1650 x 1700	160	1440	1310	
DIS 1150	A5S1150	1150	2300	6,3	2740	1650 x 1990	160	1730	1600	
DIS 1400	A5S1400	1400	2800	7,7	3310	1650 x 2280	160	2025	1880	
DIS 2000	A5S2000	2000	4000	11	4710	2270 x 1900	200	1600	1440	
DIS 2900	A5S2900	2900	5800	16	6710	2270 x 2430	200	2120	1940	

Use
Rainwater treatment system.
Sand traps suitable to treat the flow rate equivalent to rainwater (5.5 l/s x 1000 m² and 2.75 l/s x 1000 m² for covered yards) separating sedimentable inert materials (sands) from the wastewater.

Operation
The wastewater from the drainage network is conveyed into the DIS sand trap.
The sedimentation of heavy insoluble substances takes place inside DIS.

Maintenance
To maintain proper operation of the plant the level of the inert material in the sand trap must be checked every six months. If an excessive amount of sludge (inert) is found in the sludge trap, proceed to its removal.

Specification Item
The sand traps are constructed with a corrugated container for greater underground resistance and made of 100% recyclable polyethylene with rotational moulding technology. The sand traps are complete with walkable inspection manhole, inlet and outlet system of wastewater and relative gaskets that guarantee perfect tightness.
The product must be made by a certified company according to UNI EN ISO 9001:2008
The plant has been designed according to the following parameters:

Hydraulic retention time	**> 7min**
Rain flow on uncovered surfaces	5,5 l/s x 1000 m²
Rain flow on covered surfaces	2,75 l/s x 1000 m²

OIL

GRAVITATIONAL OIL TRAPS IN POLYETHYLENE

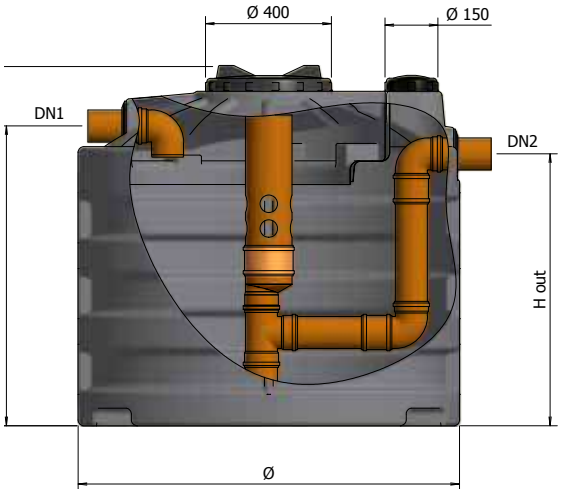

Not for drinking water

Model for underground only

Handling by forklift

Reference Standards
Legislative Decree No. 152/2006
UNI EN 858-1

WARRANTY: 2 YEARS

MODEL	CODE	COVERED AREA	UNCOVERED AREA	HEIGHT H tot	HEIGHT H in	HEIGHT H out	DIAMETER Ø	CAPACITY	OIL VOLUME	TOTAL VOLUME	DN1/DN2	Notes
		m^2	m^2	mm	mm	mm	mm	l/s	litres	litres	mm	
OIL 6	A5R0006	875	315	1240	1030	930	1310	2	58	985	125	
OIL 9	A5R0009	1125	440	1500	1290	1180	1310	2,5	74	1295	125	
OIL 12	A5R0012	1560	560	1760	1550	1430	1310	3,5	105	1730	125	
OIL 15	A5R0015	1940	750	1700	1440	1300	1650	4,3	130	2150	160	
OIL 18	A5R0018	2375	940	1990	1735	1580	1650	5,2	160	2680	160	
OIL 25	A5R0025	3125	1250	2280	2025	1870	1650	7	205	3520	160	
OIL 35	A5R0035	4500	1820	1900	1600	1440	2270	10	300	5060	200	
OIL 50	A5R0050	6370	2500	2430	2120	1940	2270	14	420	7100	200	

Use
Rainwater and yard water treatment.
The gravitational oil trap, defined by class II according to UNI EN 858-1, are setting tanks that separate mixtures with petrol, oils, mineral fats and other light fractions of petroleum products that are highly polluting and are not biodegradable. They are installed in places such as parking areas, service stations, car parks, car washes, etc. to avoid that oil-based residues flow into drains or the environment, polluting the territory after a rainfall.

Operation
The process of oil extraction uses the principles of settling by flotation. The oils, fats and substances that are lighter than water are separated into a setting area, floating on the surface, while all solid particles that are heavier than water go to settle on the bottom of the tank. The oil trap should be selected based on the drainage area that can be covered (covered car park) or uncovered (uncovered square) and the maximum drainage capacity.

Maintenance
To maintain the proper operation of the plant the flowing controls must be carried out every six months:
- the level of the inert substances in the grease separator;
- the level of oil/hydrocarbons in the grease separator;

If an excessive amount of sludge (inert) is found in the grease separator, proceed to its removal.
If an excessive amount of oil/hydrocarbons are found in the grease separator, proceed to their elimination.

Specification Item
Grease separator/sand trap suitable to separate by gravity the non-emulsified oil/hydrocarbons lighter than 0.85 g/cm^3 from the drained wastewater through static separation with efficiency increased by 90%.
Grease separators/sand traps manufactured in rotational polyethylene, in a single structure, free of joints and reinforcement plating, equipped with inlet and outlet holes, and inspection and sampling lids. Suitable for underground installation. The plant has been designed with the following parameters:

PROJECT PARAMETERS		
Type of oil/hydrocarbons (specific weight)	g/cm^3	0.85
Retention time in the treatment stage	min	approx. 4
Rainfall for the calculation of absorbing surface	l/s m^2	5,5 l/s x 1000m^2
Fire system flow (covered areas)	l/s m^2	2,2 l/s x 1000 m^2

Example of installation

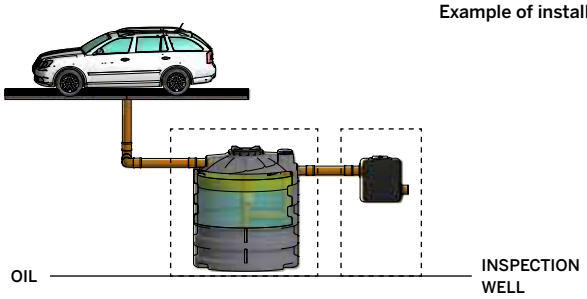

OIL-C

COALESCENT OIL TRAPS

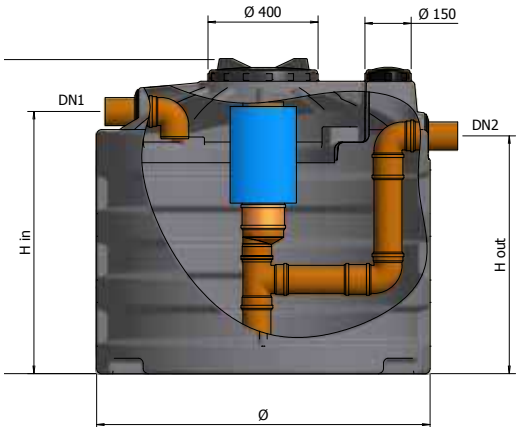

Non per acqua potabile

Modello esclusivamente da interro

Movimentazione con muletto

Reference Standards
Legislative Decree No. 152/2006
UNI EN 858-1

WARRANTY: 2 YEARS

MODEL	CODE	COVERED AREA	UNCOVERED AREA	HEIGHT H tot	HEIGHT H in	HEIGHT H out	DIAMETER Ø	CAPACITY	OIL VOLUME	TOTAL VOLUME	DN1/DN2	Notes
		m^2	m^2	mm	mm	mm	mm	l/s	litres	litres	mm	
OIL-C 6	A5R0C06	875	315	1240	1030	930	1310	2	58	985	125	
OIL-C 9	A5R0C09	1125	440	1500	1290	1180	1310	2,5	74	1295	125	
OIL-C 12	A5R0C12	1560	560	1760	1550	1430	1310	3,5	105	1730	125	
OIL-C 15	A5R0C15	1940	750	1700	1445	1300	1650	4,3	130	2150	160	
OIL-C 18	A5R0C18	2375	940	1990	1735	1580	1650	5,2	160	2680	160	
OIL-C 25	A5R0C25	3125	1250	2280	2025	1870	1650	7	205	3520	160	
OIL-C 35	A5R0C35	4500	1820	1900	1600	1440	2270	10	300	5060	200	
OIL-C 50	A5R0C50	6370	2500	2430	2120	1940	2270	14	420	7100	200	

Use
Parking apron water treatment (such as parking garages, car washes, service stations, etc.) and rainwater.
The coalescing oil trap, defined by class I according to UNI EN 858-1, are setting tanks that separate mixtures with petrol, oils, mineral fats and other light fractions of petroleum products that are highly polluting and are not biodegradable. Coalescing filters contained in the tank improve the effectiveness of the system allowing the drain into watercourses. They are installed in places such as parking areas, service stations, car parks, car washes, etc. to avoid that oil-based residues flow into drains or the environment, polluting the territory after a rainfall.

Operation
The process of oil extraction uses the principles of settling by coalescence process. Coalescence is the process by which two or more droplets of oil merge during contact. When they collide, they join together to form larger drops. When the drops of oily substances become too big, they begin to float on the surface, while all solid particles that are heavier than water are deposited on the bottom of the tank. The oil trap should be selected based on the drainage area that can be covered (covered car park) or uncovered (uncovered square) and the maximum drainage capacity.

Maintenance
To maintain the proper operation of the plant the flowing controls must be carried out every six months:
- the level of the inert substances in the grease separator;
- the level of oil/hydrocarbons in the grease separator;

If an excessive amount of sludge (inert) is found in the grease separator, proceed to its removal.
If an excessive amount of oil/hydrocarbons are found in the grease separator, proceed to their elimination.
In case the coalescing filter is particularly dirty, proceed to its removal, cleaning and reinsertion.

Specification Item
Grease separator/sand trap suitable to separate by gravity the non-emulsified oil/hydrocarbons lighter than 0.85 g/cm^3 from the drained wastewater through static separation and coalescing filtration with efficiency increased by 95%.
Grease separators/sand traps manufactured in rotational polyethylene, in a single structure free of joints and reinforcement plating, equipped with inlet and outlet holes, and inspection and sampling lids. Suitable for underground installation. The plant has been designed with the following parameters:

PROJECT PARAMETERS		
Type of oil/hydrocarbons (specific weight)	g/cm^3	0.85
Retention time in the treatment stage	min	approx. 4
Rainfall for the calculation of absorbing surface	l/s m^2	5,5 l/s x 1000 m^2

Example of installation

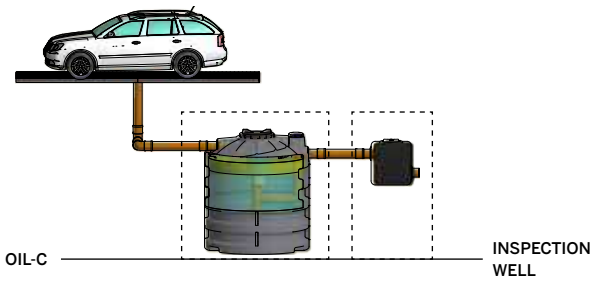

EPRAIN-C

CONTINUOUS RAINWATER COLLECTION PLANT FOR DRAIN INTO PUBLIC SEWERS

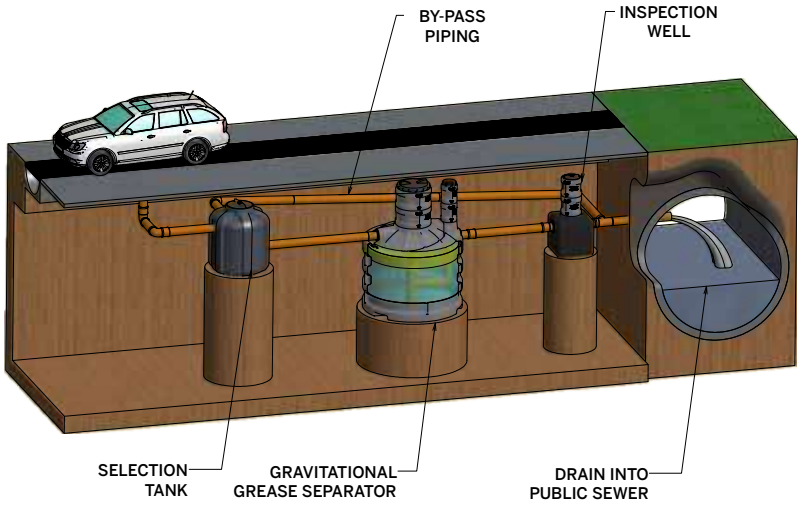

Not for drinking water

Model for underground only

Handling by forklift

Reference Standards
Legislative Decree N ° 152/2006
UNI EN 12566-1

WARRANTY: 2 YEARS

MODEL	CODE	MAXIMUM SQUARE AREA	HYDROCARBON REMOVAL EFFICIENCY	VOLUMES OF TOTAL DIMENSIONS	GREASE SEPARATOR DIMENSIONS Ø X H	GREASE SEPARATOR PIPE	SELECTION TANK IN/OUT PIPE DIAMETER	Notes
		m^2	%	m^3	mm	mm	mm	
EPRAIN C 360	A5ZC003	360	> 90	1,735	1310 x 1240	125	160/160/125	
EPRAIN C 450	A5ZC004	450	> 90	2,045	1310 x 1500	125	200/200/125	
EPRAIN C 630	A5ZC006	630	> 90	2,48	1310 x 1760	125	200/200/125	
EPRAIN C 810	A5ZC008	810	> 90	2,9	1650 x 1700	160	200/200/160	
EPRAIN C 940	A5ZC009	940	> 90	3,43	1650 x 1990	160	200/200/160	
EPRAIN C 1260	A5ZC012	1260	> 90	4,27	1650 x 2280	160	200/200/160	
EPRAIN C 1800	A5ZC018	1800	> 90	5,81	2270 x 1900	200	250/250/200	
EPRAIN C 2500	A5ZC025	2500	> 90	7,85	2270 x 2430	200	250/250/200	

Use
Rainwater runoff treatment system for outdoor yard sized considering a rainfall of 400 l/s*ha and able to convey the equivalent flow of rainwater (5 mm in 15 minutes as per Regional Reg. Lombardy no. 4 of 24/03/06) to the oil selection compartment for drain into the public sewer.

Operation
The rainwater containing oils, hydrocarbons, suspended solids and sediment, enter the selection tank where coarse solids (gravel, crushed rock) decant, thus ensuring the perfect functioning of purification in later stages.
The pipe that from the selection tank, which leads to the grease trap is positioned with respect to the bypass pipe in such a way that it only unloads the flow equal to the rainwater (the first 5 mm of rainwater evenly distributed over the entire drainage area served by the drainage network); the flow rate that exceeds that of the rainwater is conveyed through the bypass pipe directly into the final receptor.
The wastewater, loaded with oils/hydrocarbons, which overflows in the grease trap statically, is separated by gravity.
The rainwater, once treated, is passed through an inspection well into the final receptor.

Maintenance
To maintain the proper operation of the plant the flowing controls must be carried out every six months:
- the level of the inert substances in the selection tank;
- the level of the inert substances in the grease separator;
- the level of oil/hydrocarbons in the grease separator;

If an excessive amount of sludge (inert) is found in the various tanks proceed to its removal.
If an excessive amount of oil/hydrocarbons are found in the grease separator, proceed to their elimination.

Specification Item
Supply of rainwater treatment plant (5 mm) for paved surfaces of.... m^2 and suitable for the drain of treated water into public sewers; this system consists of the following artefacts:
- flow-splitting chamber suitable to send the rainwater to the grease separator and send the waters from secondary rainfall, through bypass piping directly to the receiving body of the water;
- Grease separator where the physical separation of oils and hydrocarbons by flotation will take place.

All the artefacts are made of constant thickness polyethylene (12 mm) with the rotational moulding technique and consist of ribs, which confer resistance for underground use, complete with screw caps for inspection.

EPRAIN ACC

STORAGE RAINWATER COLLECTION PLANT FOR DRAIN INTO PUBLIC SEWERS

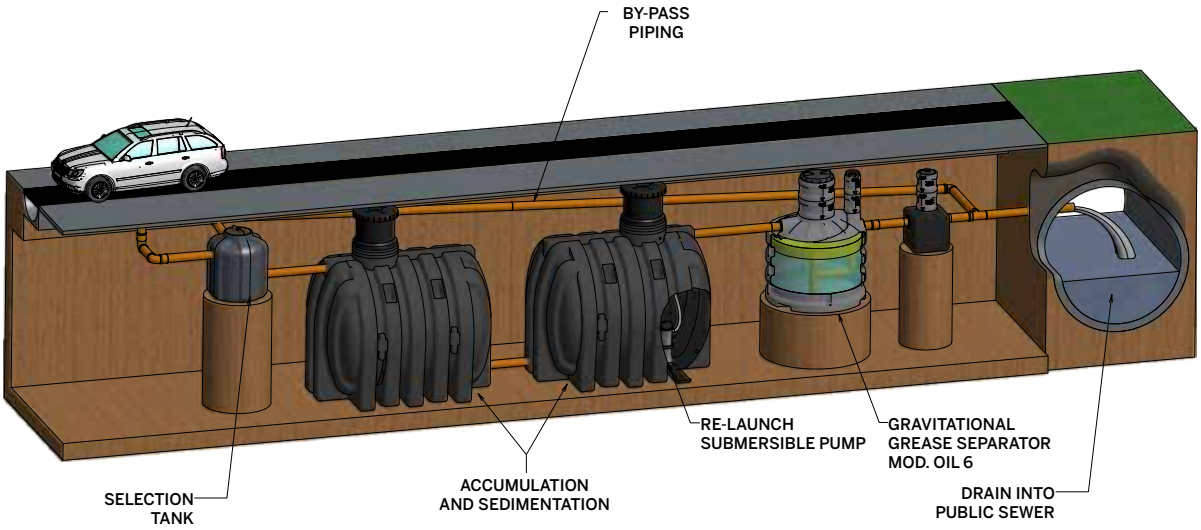

Not for drinking water

Model for underground only

Handling by forklift

Reference Standards
Reg. Decree Lombardy no. 4 of 24/03/06

WARRANTY: 2 YEARS

MODEL	CODE	UNCOVERED AREA	VOLUME OF OVERALL DIMENSIONS	OIL AND HYDROCARBON REMOVAL EFFICIENCY	STORMWATER	SELECTION TANK DIMENSIONS	ACCUMULATIONS USED	EMPTYING TIME <48 H	PUMP	DIAMETER SELECTION TANK PIPE	Notes
		m²	m³	%	m³	Ø/h mm		min	Kw	mm	
EPRAIN ACC 200	A5ZA002	200	3,15	>90	1	106/101	1 x CHU-1000	8,3	0,22	160/160/110	
EPRAIN ACC 400	A5ZA004	400	4,15	>90	2	106/101	1 x CHU-2000	16,6	0,22	160/160/110	
EPRAIN ACC 600	A5ZA006	600	5,15	>90	3	106/101	1 x CU-3000	20	0,22	160/160/110	
EPRAIN ACC 1000	A5ZA010	1000	7,05	>90	5	106/101	1 x CU-5000	33	0,22	200/200/110	
EPRAIN ACC 1600	A5ZA016	1600	10,05	>90	8	106/101	1 x CU-5000 + 1 x CU-3000	53	0,22	200/200/110	
EPRAIN ACC 2000	A5ZA020	2000	12,05	>90	10	106/101	1 x CU-10000	67	0,22	250/250/110	
EPRAIN ACC 2500	A5ZA025	2600	15,05	>90	13	106/101	1 x CU-10000 +1 x CU-3000	87	0,22	250/250/110	
EPRAIN ACC 3000	A5ZA030	3000	17,05	>90	15	106/101	1 x CU-10000 +1 x CU-5000	100	0,22	250/250/160	
EPRAIN ACC 4000	A5ZA040	4000	22,05	>90	20	106/101	2 x CU-10000	133	0,22	315/315/160	
EPRAIN ACC 5000	A5ZA050	5000	27,05	>90	25	145/140	2 x CU-10000 + 1 x CU 5000	167	0,22	315/315/160	
EPRAIN ACC 6000	A5ZA060	6000	32,05	>90	30	145/140	3 x CU-10000	200	0,22	315/315/160	
EPRAIN ACC 8000	A5ZA080	8000	42,05	>90	40	145/140	4 x CU-10000	267	0,22	315/315/200	
EPRAIN ACC 10000	A5ZA100	10000	55,52	>90	50	145/140	5 x CU-10000	119	0,22	400/400/200	
EPRAIN ACC 12000	A5ZA120	12000	65,52	>90	60	145/140	6 x CU-10000	143	0,22	400/400/200	

Use
Rainwater runoff treatment system for outdoor paved area sized considering a rainfall of 400 l/s*ha suitable to convey rainwater (5 mm in 15 minutes as per Regional Reg. Lombardy no. 4 of 24/03/06) in the storage area to then be degreased prior to the delivery into the final receptor after a time of ..... h (between 1 and 100 hours) from the end of the rainfall.
The final receptor must be the public sewer.

Operation
The rainwater containing oils, hydrocarbons, suspended solids and sediment, enter the selection tank where coarse solids (gravel, crushed rock) decant, ensuring the perfect functioning of purification in later stages.
The wastewater, free of coarse solids, overflows into the sedimentation/accumulation sector sized to contain the rainwater (the first 5 mm of rainfall evenly distributed over the entire drainage area served by the drainage network as per Regional Decree of Lombardy no. 62 of 27/05/85).
Once the sedimentation/accumulation sector is filled the return valve, located upstream of the system, blocks the return of the water stored, and the wastewater that continues to enter the selection tank causes the raising of the door in the well so that the water overflows into the bypass pipe flowing directly into the final receptor.
The wastewater stored in the sedimentation/accumulation sector, after being separated from the sedimentable substances is re-launched to a grease separator using a submersible impeller electric pump complete with safety float.
The discharge of the sedimentation/accumulation sector takes place at a distance of 48 hours from the end of the rainfall through the electric pump triggered by an electronic control unit actuated by a rain sensor, and its switching off is guaranteed using a minimum float placed inside the sedimentation/accumulation sector.
The light liquids (oils and hydrocarbons) in the grease separator are statically separated by gravity. The grease separator can be equipped with a floating obstructer, which guarantees the outgoing flow interruption in case the setting area of the grease separator has accumulated an excessive amount of oil/hydrocarbons avoiding, therefore, the drain into the final receptor.
The rainwater, once treated, is passed through an inspection well into the final receptor.

Maintenance
To maintain the EPRAIN ACC rainwater runoff treatment system efficient it is necessary to check the following every six months:
- Check the presence of inert materials (gravel and sand) inside the selection tank
- Check for the presence of the sand inside the storage tanks checking that they do not obstruct the suction port of the electric pump
- Check the presence of inert materials and oils inside the grease separator
- Verify the correct operation of the inlet valve on the first installation
- Check the electrical connections

Proceed to the drainage in the case of:
- excessive presence of gravel and sand inside the selection tank.
- a level of sand inside the accumulation installations blocking the mouth of the electric pump.
- excessive material (sands) inside the grease separator (about 40 cm of material deposited on the bottom).

In the event of excess oils within the grease separator, proceed to their removal.

Operation
The rainwater containing oils, hydrocarbons, suspended solids and sediment, enter the selection tank where coarse solids (gravel, crushed rock) decant, thus ensuring the perfect functioning of purification in later stages.
The wastewater, free of coarse solids, overflows into the sedimentation/accumulation sector sized to contain the rainwater (the first 5 mm of rainfall evenly distributed over the entire drainage area served by the drainage network as per
Regional Decree of Lombardy no. 62 of 27/05/85).
Once the sedimentation/accumulation sector is filled the return valve, located upstream of the system, blocks the return of the water stored, and the wastewater that continues to enter the selection tank causes the raising of the door in the well so that the water overflows into the bypass pipe flowing directly into the final receptor.
The wastewater stored in the sedimentation/accumulation sector, after being separated from the sedimentable substances is re-launched to a grease separator using a submersible impeller electric pump complete with safety float.
The discharge of the sedimentation/accumulation sector takes place at a distance of 48 hours from the end of the rainfall through the electric pump triggered by an electronic control unit actuated by a rain sensor, and the switching off is guaranteed using a minimum float placed inside the sedimentation/accumulation sector.
The light liquids (oils and hydrocarbons) in the grease separator are statically separated by gravity.
The grease separator can be equipped with a floating obstructer, which guarantees the outgoing flow interruption in case the setting area of the grease separator has accumulated an excessive amount of oil/hydrocarbons avoiding, therefore, the drain into the final receptor.
The rainwater, once treated, is passed through an inspection well into the final receptor.

Specification Item
Supply of rainwater treatment plant (5 mm) for paved surfaces of.... m^2 and suitable for the drain of treated water into surface bodies; this system consists of the following artefacts:
- flow-splitting chamber suitable to send the rainwater to the storage tank and send the waters from secondary rainfall, through bypass piping directly to the receiving body of the water.
- Storage tank suitable to accommodate a quantity of rain of height h = 5 mm uniformly distributed throughout the paved area in question; the water to be treated will be stored inside for a time t (0-100 hours)
- The system is equipped with non-return valve that closes the accumulation when full and an electric pump that after a certain time t will send the water to a grease separator
- Grease separator where the physical separation of oils and hydrocarbons by flotation will take place
- End of rainfall sensors operate the electric pump, which will empty the installations after a time t from the end of the weather event.
- An electrical system suitable for the management of the plant.

All the artefacts are made of constant thickness polyethylene (12 mm) with the rotational moulding technique and consist of ribs, which confer resistance for underground use, complete with screw caps for inspection and relative extensions (50 cm) in diameter from DN 50 to DN 63.

EPRAIN-C F.C.

CONTINUOUS RAINWATER COLLECTION PLANT FOR DRAIN INTO WATERCOURSES

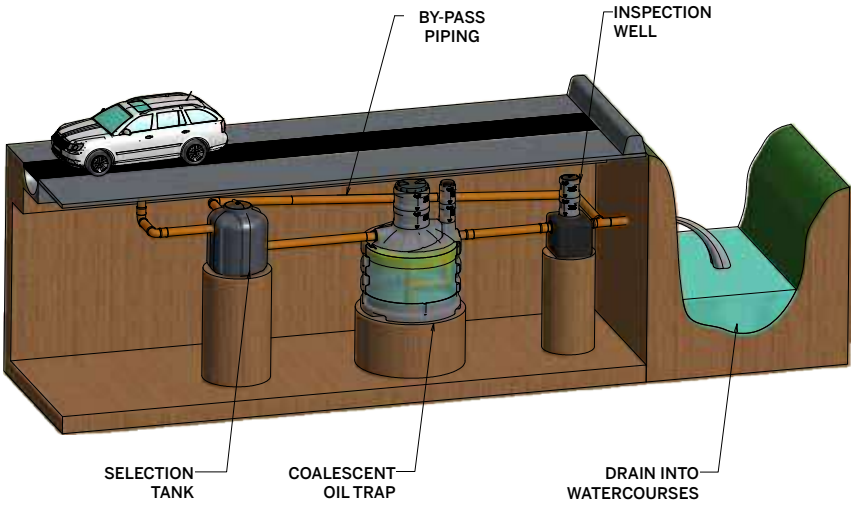

Not for drinking water

Model for underground only

Handling by forklift

Reference Standards
Legislative Decree N ° 152/2006
UNI EN 12566-1

WARRANTY: 2 YEARS

MODEL	CODE	MAXIMUM SQUARE AREA	HYDROCARBON REMOVAL EFFICIENCY	VOLUMES OF TOTAL DIMENSIONS	GREASE SEPARATOR DIMENSIONS Ø X H	GREASE SEPARATOR PIPE DIAMETER	SELECTION TANK IN/OUT PIPE DIAMETER	Notes
		m^2	%	m^3	mm	mm	mm	
EPRAIN C 360 F.C.	A5ZC003 000FC	360	> 95	1,735	1310 x 1240	125	160/160/125	
EPRAIN C 450 F.C.	A5ZC004 000FC	450	> 95	2,045	1310 x 1500	125	200/200/125	
EPRAIN C 630 F.C.	A5ZC006 000FC	630	> 95	2,48	1310 x 1760	125	200/200/125	
EPRAIN C 810 F.C.	A5ZC008 000FC	810	> 95	2,9	1650 x 1700	160	200/200/160	
EPRAIN C 940 F.C.	A5ZC009 000FC	940	> 95	3,43	1650 x 1990	160	200/200/160	
EPRAIN C 1260 F.C.	A5ZC012 000FC	1260	> 95	4,27	1650 x 2280	160	200/200/160	
EPRAIN C 1800 F.C.	A5ZC018 000FC	1800	> 95	5,81	2270 x 1900	200	250/250/200	
EPRAIN C 2500 F.C.	A5ZC025 000FC	2500	> 95	7,85	2270 x 2430	200	250/250/200	

Use
Rainwater runoff treatment system for outdoor paved area sized considering a rainfall of 400 l/s*ha and able to convey the equivalent flow of rainwater (5 mm in 15 minutes as per Regional Reg. Lombardy no. 4 of 24/03/06) to the oil selection compartment for drain into watercourses.

Operation
The rainwater containing oils, hydrocarbons, suspended solids and sediment, enter the selection tank where coarse solids (gravel, crushed rock) decant, thus ensuring the perfect functioning of purification in later stages.
The pipe, that from the selection tank leads to the grease trap is positioned with respect to the bypass pipe in such a way that it only unloads the flow equal to the rainwater (the first 5 mm of rainwater evenly distributed over the entire drainage area served by the drainage network); the flow rate that exceeds that of the rainwater is conveyed through the bypass pipe directly into the final receptor.
The wastewater, which is loaded with oil/hydrocarbons, overflows into the oil separator suitable for separating by gravity the non-emulsified oil/hydrocarbons with a specific weight of less than 0.85 g/cm^3 from the drained wastewater through static separation and coalescing filtration with efficiency increased by 95%.
The rainwater, once treated, is passed through an inspection well into the final receptor.

Maintenance
To maintain the proper operation of the plant the flowing checks must be carried out every six months:
- the level of the inert substances in the selection tank;
- the level of the inert substances in the grease separator;
- the level of oil/hydrocarbons in the grease separator and cleaning of the coalescing filter;

If an excessive amount of sludge (inert) is found in the various tanks, proceed to its removal.
If an excessive amount of oil/hydrocarbons are found in the oil separator, proceed to their elimination.

Specification Item
Supply of rainwater treatment plant (5 mm) for paved surfaces of.... m^2 and suitable for the drain of treated water into watercourses in compliance with Tab. 3, Legislative Decree 152/06, Annex 5; this system consists of the following artefacts:
- flow-splitting chamber suitable to send the rainwater to the grease separator and send the waters from secondary rainfall, through bypass piping directly into the receiving body of the water.
- oil separator with coalescing filter in which the physical separation of oils and hydrocarbons by flotation and by coalescence will take place.

All the artefacts are made of constant thickness polyethylene (12 mm) with the rotational moulding technique and consist of ribs, which confer resistance for underground use, complete with screw caps for inspection.

Figure 11
Continuous rainwater collection plant for drain into watercourses

EPRAIN ACC F.C.

STORAGE RAINWATER COLLECTION PLANT FOR DRAIN INTO SURFACE

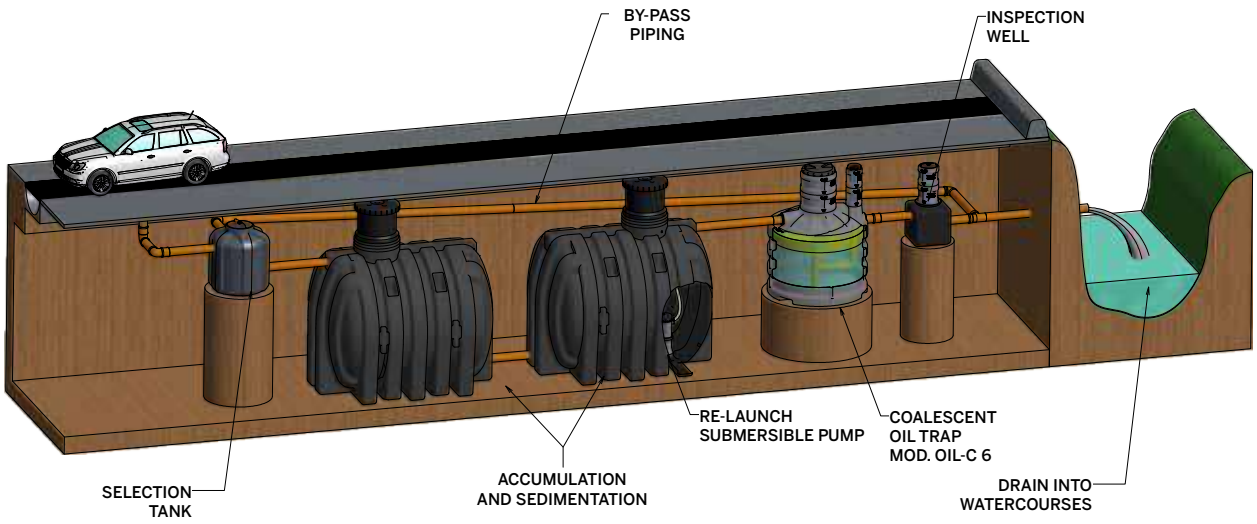

Not for drinking water

Model for underground only

Handling by forklift

Reference Standards
Legislative Decree N ° 152/2006
UNI EN 12566-1

WARRANTY: 2 YEARS

MODEL	CODE	UNCOVERED SQUARE	VOLUME OF OVERALL DIMESIONS	OIL AND HYDROCARBON REMOVAL EFFICIENCY	STORMWATER	SELECTION TANK DIMENSIONS Ø/h	ACCUMULAT -IONS USED	EMPTYING TIME <48 H	PUMP	DIAMETER SELECTION TANK PIPE	Notes
		m^2	m^3	%	m^3	mm		min	Kw	mm	
EPRAIN ACC 200 F.C.	A5ZA002 000FC	200	3,15	>95%	1	106/101	1 x CHU-1000	8,3	0,22	160/160/110	
EPRAIN ACC 400 F.C.	A5ZA004 000FC	400	4,15	>95%	2	106/101	1 x CHU-2000	16,6	0,22	160/160/110	
EPRAIN ACC 600 F.C.	A5ZA006 000FC	600	5,15	>95%	3	106/101	1 x CU-3000	20	0,22	160/160/110	
EPRAIN ACC 1000 F.C.	A5ZA010 000FC	1000	7,05	>95%	5	106/101	1 x CU-5000	33	0,22	200/200/110	
EPRAIN ACC 1600 F.C.	A5ZA016 000FC	1600	10,05	>95%	8	106/101	1 x CU-5000 1 x CU-3000	53	0,22	200/200/110	
EPRAIN ACC 2000 F.C.	A5ZA020 000FC	2000	12,05	>95%	10	106/101	1 x CU-10000	67	0,22	250/250/110	
EPRAIN ACC 2500 F.C.	A5ZA025 000FC	2600	15,05	>95%	13	106/101	1 x CU-10000 1 x CU-3000	87	0,22	250/250/110	
EPRAIN ACC 3000 F.C.	A5ZA030 000FC	3000	17,05	>95%	15	106/101	1 x CU-10000 1 x CU-5000	100	0,22	250/250/160	
EPRAIN ACC 4000 F.C.	A5ZA040 000FC	4000	22,05	>95%	20	106/101	2 x CU-10000	133	0,22	315/315/160	
EPRAIN ACC 5000 F.C.	A5ZA050 000FC	5000	27,05	>95%	25	145/140	2 x CU-10000 1 x CU 5000	167	0,22	315/315/160	
EPRAIN ACC 6000 F.C.	A5ZA060 000FC	6000	32,05	>95%	30	145/140	3 x CU-10000	200	0,22	315/315/160	
EPRAIN ACC 8000 F.C.	A5ZA080 000FC	8000	42,05	>95%	40	145/140	4 x CU-10000	267	0,22	315/315/200	
EPRAIN ACC 10000 F.C.	A5ZA100 000FC	10000	55,52	>95%	50	145/140	5 x CU-10000	119	0,22	400/400/200	
EPRAIN ACC 12000 F.C.	A5ZA120 000FC	12000	65,52	>95%	60	145/140	6 x CU-10000	143	0,22	400/400/200	

Use
Rainwater runoff treatment system for outdoor yard sized considering a rainfall of 400 l/s*ha suitable to convey rainwater (5 mm in 15 minutes as per Regional Reg. Lombardy no. 4 of 24/03/06) in the storage area to then be degreased prior to the delivery into the final receptor after a time of ..... h (between 1 and 100 hours) from the end of the rainfall. The final receptors may be watercourses.

Operation
The rainwater containing oils, hydrocarbons, suspended solids and sediment, enter the selection tank where coarse solids (gravel, crushed rock) decant, thus ensuring the perfect functioning of purification in later stages.
The wastewater, free of coarse solids, overflows into the sedimentation/accumulation sector sized to contain the rainwater (the first 5 mm of rainfall evenly distributed over the entire drainage area served by the drainage network as per Regional Decree of Lombardy no. 62 of 27/05/85). Once the sedimentation/accumulation sector is filled the return valve, located upstream of the system, blocks the return of the water stored, while the wastewater that continues to enter the selection tank causes the raising of the door in the well so that the water overflows into the bypass pipe flowing directly into the final receptor.
The wastewater stored in the sedimentation/accumulation sector, after being separated from the sedimentable substances is re-launched to a coalescing oil separator using a submersible impeller electric pump complete with safety float.
The discharge of the sedimentation/accumulation sector takes place at a distance of 48 hours from the end of the rainfall through the electric pump triggered by an electronic control unit actuated by a rain sensor. The switching off is guaranteed using a minimum float placed inside the sedimentation/accumulation sector.
In the oil separator with the coalescing filter, the physical separation of oils and hydrocarbons by flotation and by coalescence will take place.
The grease separator can be equipped with a floating obstructer, which guarantees the outgoing flow interruption in case the setting area of the grease separator has accumulated an excessive amount of oil/hydrocarbons avoiding, therefore, the drain into the final receptor. The rainwater, once treated, is passed through an inspection well into the final receptor.

Maintenance
To maintain the EPRAIN ACC F.C. rainwater runoff treatment system efficient it is necessary to check the following every six months:
- Check the presence of inert materials (gravel and sand) inside the selection tank;
- Check for the presence of the sand inside the storage tanks checking that they do not obstruct the suction port of the pump;
- Check the presence of inert materials and oils inside the grease separator;
- Check that there are no materials that could obstruct the coalescing filter;
- Verify the correct operation of the inlet valve on the first installation;
- Check the electrical connections.

Proceed to the drainage in the case of:
- excessive presence of gravel and sand inside the selection tank.
- a level of sand inside the accumulation installations blocking the mouth of the electric pump.
- excessive material (sands) inside the grease separator (about 40 cm of material deposited on the bottom).

In the event of excess oils within the grease separator, proceed to their removal.
If the coalescing filter is particularly dirty, proceed to its removal, cleaning and reinsertion.

Specification Item
Supply of rainwater treatment plant (5 mm) for paved surfaces of.... m^2 and suitable for the drain of treated water into surface bodies; this system consists of the following artefacts:
- Flow splitting chamber suitable to send the rainwater to the storage tank and send the waters from secondary rainfall, through bypass piping directly to the receiving body of the water;
- Storage tank suitable to accommodate a quantity of rain of height h = 5 mm uniformly distributed throughout the square in question; the water to be treated will be stored inside for a time t (0-100 hours);
- The system is equipped with a non-return valve that closes the accumulation when full and an electric pump that after a certain time t will send the water to a grease separator.
- Grease separator where the physical separation of oils and hydrocarbons by flotation and coalescence will take place (by passing the wastewater through a polyurethane foam filter);
- End of rainfall sensors operate the electric pump which will empty the installations after a time t from the end of the weather event;
- An electrical system suitable for the management of the plant.

All the artefacts are made of constant thickness polyethylene (12 mm) with the rotational moulding technique and consist of ribs, which confer resistance for underground use, complete with screw caps for inspection and relative extensions.

Figure 12
Storage rainwater collection plant for drain into watercourses

NOTES

DATA SHEET FOR RAINWATER TREATMENT PLANTS

COMPANY

FULL NAME

ADDRESS NO

TOWN ZIP COUNTY

TEL. FAX E-MAIL

☐ PRIVATE ☐ BUSINESS ACTIVITY

PLANT LOCATION

ANY NOTES

.....

.....

SETTLEMENT TYPE

☐ SERVICE AREA ☐ CAR PARK ☐ DEPOSIT/WAREHOUSE ☐ ROAD

☐ COVERED:
Fire extinguishing flow .....
or washing (manual, automatic) .....

☐ UNCOVERED:
size of the area (m^2) .....

TYPE OF TREATMENT

☐ RAINWATER IMMEDIATE

☐ TREATMENT

☐ PLANNED ACCUMULATION

☐ SUBSEQUENT

FINAL DRAINAGE

☐ IN SURFACE WATER IN

☐ SEWER

PROJECT TYPE

☐ NEW PLANT

☐ MODIFICATION OF EXISTING PLANT

In the case of existing plant, attach a brief description indicating the main relevant parameters (type of system, efficiency, project size, utilities)

LEVEL DIFFERENCE BETWEEN THE EXIT PIPE OF THE ENTRY POINT OF THE PLANT AND THE LEVEL OF THE COUNTRYSIDE cm .....

DIAMETER OF OUTLET PIPE IN THE INLET POINT IN THE PLANT cm .....

LEVEL DIFFERENCE BETWEEN THE POINT OF ENTRY IN THE RECEIVING BODY AND THE LEVEL OF THE COUNTRYSIDE cm .....

ANY ATTACHMENTS

☐ PLANS (even outlined) ☐ ANALYSIS

N.B.: THE EQUIPMENT UPSTREAM AND DOWNSTREAM OF THE PLANT IS NOT OUR RESPONSIBILITY

RETURN THE FORM COUNTERSIGNED FOR CONFIRMATION OF PROJECT DATA DISCLOSED, BY, WHICH WE WILL DEVELOP OUR PURIFYING PROPOSAL, MAKING ANY ADJUSTMENTS AND/OR CORRECTIONS.
SEND FORM TO: aquapura@elbi.it / Fax 049.8841610

DATE ..... STAMP AND SIGNATURE .....

NOTES

LAM-LAMINATION

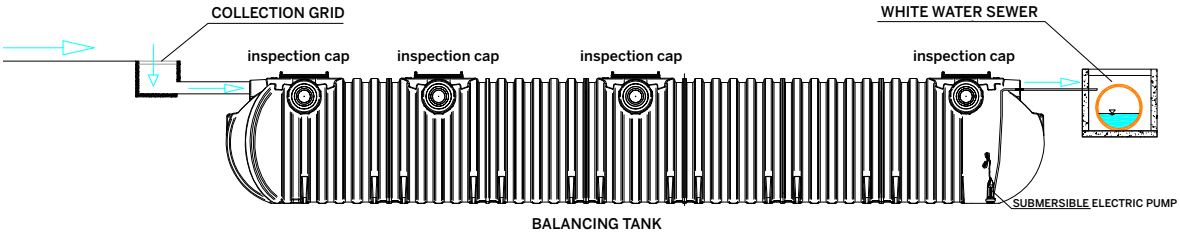

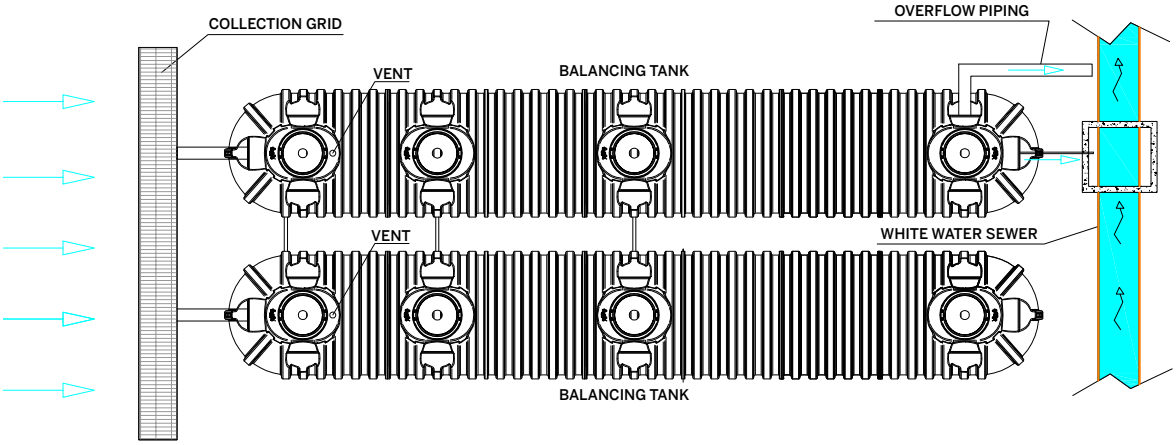

Reference Standards
- Basin Authority guidelines
- Municipal/Regional Building Regulations
- Regional Decrees

Laminated tanks consist of corrugated containers for underground use of the modular type with high-density recyclable polyethylene (LLDPE) 100% with rotational moulding technology; they are supplied with inlet and outlet pipes in PVC that guarantee perfect tightness. On request, the tanks can be equipped with electric pumps and electric panel for the management of the same.

MODEL	OVERALL HEIGHT, H TOT	LENGTH	DIAMETER Ø	MAXIMUM PIPE COUPLING IN/OUT	TOTAL VOLUME
	cm	m	cm	mm	litre
LAM 40000 M	216	13,46	210	400	40.000
LAM 80000 M	216	26,42	210	400	80.000
LAM 120000 M	216	39,38	210	400	120.000
LAM 160000 M	216	52,34	210	400	160.000
LAM 200000 M	216	65,30	210	400	200.000
LAM 240000 M	216	78,26	210	400	240.000

N.B. For volumes other than those indicated in the table and all project quotes, contact the Technical Office aquapura@elbi.it

Use of lamination

The waterproofing of the territory, following the construction of new settlements or industrial businesses, has highlighted several issues related to the disposal of rainwater from these areas. In particular, the inadequacy of existing drainage systems and stream receptors can have serious hydraulic-quantitative consequences. Urbanization essentially produces two types of alterations:

1. it produces a change in the water balance of surface water due to less infiltration of rainwater into the ground;

2. during rainfalls, increased hydraulic flow is delivered to receptors due to increased waterproofing and the increased speed of surface runoff, worsening the problems associated with the control of flooding.

These consequences can be controlled by inserting laminated artefacts into the drainage networks with the function of provisionally accumulating water volumes resulting from meteorological events, to send them subsequently to the network downstream or the final receptor with reduced flow that is compatible with them.

WATER TREATMENT

CAR WASHES

Car washing
water treatment

WASH PF

CAR WASH SYSTEMS WITH DRAINAGE INTO PUBLIC SEWERS

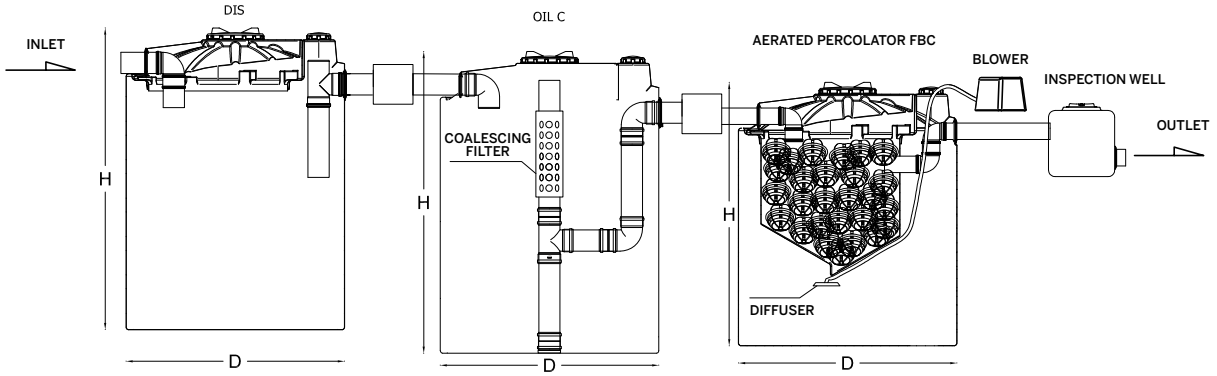

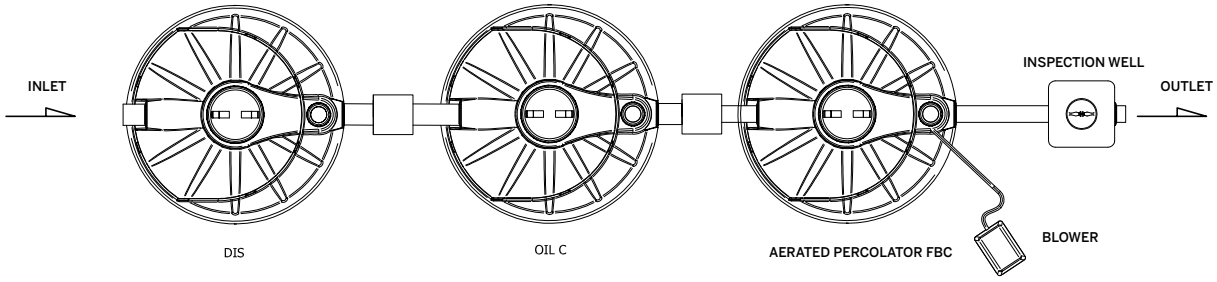

Not for drinking water

Model for underground only

Handling by forklift

Reference Standards
Legislative Decree N° 152/2006

WARRANTY: 2 YEARS

MODEL	CODE	CAR/ D	DAILY FLOW	PEAK FLOW	SEDIMENTATION TANK				GREASE SEPARATOR			AIR BLOWN PERCOLATING FILTER			Notes
					MODEL	DIAMETER	HEIGHT H	VOLUME	MODEL	DIAMETER Ø	HEIGHT H	DIAMETER	HEIGHT H	VOLUME	
		NO.	l/g	l/h	DIS	cm	cm	litre	OIL-C	cm	cm	cm	cm	litre	
WASH PF 10	A5L0010	0-10	2000	200	500	131	150	1170	6	131	124	131	124	955	
WASH PF 20	A5L0020	11-20	4000	400	640	131	176	1490	6	131	124	131	150	1295	
WASH PF 30	A5L0030	21-30	6000	600	940	165	170	2170	6	131	124	131	176	1730	
WASH PF 40	A5L0040	31-40	8000	800	1150	165	199	2740	12	131	176	131	176	1730	
WASH PF 50	A5L0050	41-50	10000	1000	1400	165	228	3310	15	165	170	165	199	2680	
WASH PF 60	A5L0060	51-60	12000	1200	1400	165	228	3310	25	165	228	165	199	2680	
WASH PF 80	A5L0080	61-80	16000	1600	2000	227	190	4710	35	227	190	165	228	3520	
WASH PF 100	A5L0100	81-100	20000	2000	2900	227	243	6710	35	227	190	227	190	5060	

Use
A treatment system for car washing equipment characterized by the presence of pollutants such as suspended solids, oils, hydrocarbons and detergents, suitable for drain into public sewers.

Operation
The wastewater from manual car washing is first conveyed to the sedimentation tank where sedimentable materials are withheld, and are then sent to the oil separation section where the oils and hydrocarbons are withheld. Finally, it is conveyed to the air blown percolating filter where the biological treatment takes place.

Maintenance
Sedimentation tank/grease trap maintenance
You are advised to check every two months the amount of sludge in the sedimentation tank/grease trap and if necessary remove it.
Grease separator maintenance
Every two months check the volume of separated oils and hydrocarbons and remove them at least every six months.
Remove and clean the coalescing filter at least every six months.
Maintenance of the air blown percolating filter
Regularly check that no anomalies have occurred to the electrical panel if present.
Verify that the blower works properly, that is, movement must be observed in the volume of oxidation coinciding with the operating time.
Every six months carry out the removal of excess sludge. Such removal must be carried out by a specialized company.

Specification Item
A biological purification system for water coming from car washing equipment drained into public sewers.
The water treatment system from the car washes in question is composed of:

- 1 sedimentation tank/grease trap for sludge constructed with a corrugated container for greater underground resistance and made of 100% recyclable polyethylene with rotational moulding technology. The sand traps are complete with walkable inspection manhole and suitable for the insertion of extensions, inlet and outlet system of wastewater and relative gaskets that guarantee perfect tightness;
- 1 grease separator/sand trap with coalescing filter suitable to separate by gravity the non-emulsified oil/hydrocarbons lighter than 0.85 g/cm^3 from the wastewater drain through static separation and coalescing filtration with efficiency increased by 95%. The grease separators/sand traps are constructed with a corrugated container for underground resistance and complete with walkable ribbed maintenance lid both made of 100% recyclable polyethylene with rotational moulding technology.
- The grease separators/sand traps are complete with walkable inspection manhole and suitable for the insertion of extensions, a coalescing filter with its stainless steel grid filter which is easily removable for cleaning operations, inlet and outlet system of wastewater and related seal, which ensure the perfect tightness;
- 1 "air blown percolator" biological purification system constructed with a corrugated container for greater underground resistance and made of 100% recyclable polyethylene with rotational moulding technology. The aerobic percolating filter biological treatment plants come complete with walkable inspection manhole and are suitable for the insertion of extensions, compressor, non-clogging tubular diffuser, perforated input pipe to ensure a distributed percolation across the entire surface of the filter, random fill media in polypropylene with a specific surface of 120 m^2/m^3, inlet and outlet system of wastewater and relevant seals that guarantee a perfect tightness.

WASH T3

CAR WASH SYSTEMS WITH DRAINAGE INTO SURFACE WATER

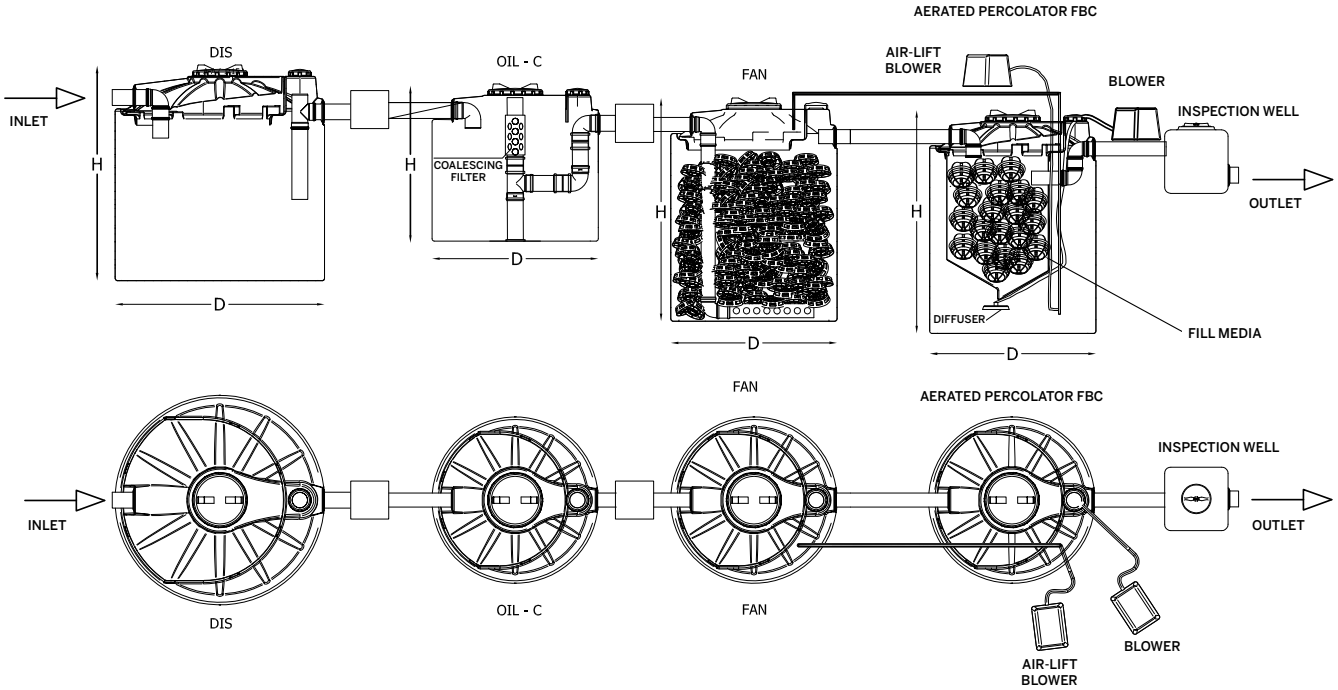

Not for drinking water

Model for underground only

Handling by forklift

Reference Standards
Legislative Decree N ° 152/2006

WARRANTY: 2 YEARS

MODEL	CODE	CAR/ D	DAILY FLOW	PEAK FLOW	SEDIMENTATION TANK				GREASE SEPARATOR			ANAEROBIC PERCOLATING FILTER	VENTILATED PERCOLATING FILTER WITH RECIRCULATION			Notes
					MODEL	DIAMETER	HEIGHT H	VOLUME	MODEL	DIAMETER	HEIGHT H	MODEL	DIAMETER	HEIGHT H	VOLUME	
		NO.	l/g	l/h	DIS	cm	cm	litri	OIL-C	cm	litres	FAN	cm	cm	litres	
WASH T3 10	A5X0010	0-10	2000	200	500	131	1500	1170	6	131	124	6	131	124	955	
WASH T3 20	A5X0020	11-20	4000	400	640	131	1760	1490	6	131	124	12	131	150	1295	
WASH T3 30	A5X0030	21-30	6000	600	940	165	1700	2170	6	131	124	12	131	176	1730	
WASH T3 40	A5X0040	31-40	8000	800	1150	165	1990	2740	12	131	176	15	131	176	1730	
WASH T3 50	A5X0050	41-50	10000	1000	1400	165	228	3310	15	165	170	18	165	199	2680	
WASH T3 60	A5X0060	51-60	12000	1200	1400	165	228	3310	25	165	228	18	165	199	2680	
WASH T3 80	A5X0080	61-80	16000	1600	2000	227	190	4710	35	227	190	25	165	228	3520	
WASH T3 100	A5X0100	81-100	20000	2000	2900	227	243	6710	35	227	190	35	227	190	5060	

Use
A treatment system for car washing equipment characterized by the presence of pollutants such as suspended solids, oils, hydrocarbons and detergents, suitable for the drain in the limits of Tab. 3, Legislative Decree 152/06, Annex 5, drainage into surface water.

Operation
The wastewater from manual car washing is first conveyed to the sedimentation tank where sedimentable materials are withheld, and are then sent to the oil separation section where the oils and hydrocarbons are withheld. The water then will be conveyed into the biological system consisting of an anaerobic percolating filter followed by air blown percolating filter with sludge recirculation. In the biological phase thanks to the presence of specific bacterial strains (PAO, Phosphorus Accumulating Organism) the phosphorus in the wastewater can be destroyed.

Maintenance
Sedimentation tank/grease trap maintenance
You are advised to check every two months the amount of sludge in the sedimentation tank/grease trap and if necessary remove it.
Grease separator maintenance
Every two months check the volume of separated oils and hydrocarbons and remove them at least every six months.
Remove and clean the coalescing filter at least every six months.
Maintenance of the anaerobic filter
Check for blockages in the pipes and drain sludge once every 6 months
Maintenance of the air blown percolating filter
Regularly check that no anomalies have occurred to the electrical panel if present.
Verify that the blower works properly, that is, movement must be observed in the volume of oxidation coinciding with the operating time.
Every six months carry out the removal of excess sludge. Such removal must be carried out by a specialized company. Check the functioning of the airlift blower controlling that water and sludge arrives in anaerobic percolator filter.

Specification Item
A biological purification system for water coming from car washing equipment drained into surface water.
The water treatment system from the car washes in question is composed of:

- 1 sedimentation tank/grease trap constructed with a corrugated container for greater underground resistance and made of 100% recyclable polyethylene with rotational moulding technology. The sand traps are complete with walkable inspection manhole and suitable for the insertion of extensions, inlet and outlet system of wastewater and relative gaskets that guarantee perfect tightness;
- 1 grease separator/sand trap with coalescing filter suitable to separate by gravity the non-emulsified oil/hydrocarbons lighter than 0.85 g/cm^3 from the wastewater drained through static separation and coalescing filtration with efficiency increased by 95%. The grease separators/sand traps are constructed with a corrugated container for underground resistance and complete with walkable ribbed maintenance lid both made of 100% recyclable polyethylene with rotational moulding technology.
  The grease separators/sand traps are complete with walkable inspection manhole and suitable for the insertion of extensions, a coalescing filter with its stainless steel grid filter which is easily removable for cleaning operations, inlet and outlet system of wastewater and related seal, which ensure the perfect tightness;
- 1 "FAN anaerobic percolating filter" biological purification system constructed with a corrugated container for greater underground resistance and made of 100% recyclable polyethylene with rotational moulding technology. The anaerobic percolating filter biological treatment plants come complete with walkable inspection manhole and are suitable for the insertion of extensions, perforated input pipe to ensure a distributed percolation across the entire surface of the filter, random fill media in polypropylene with a specific surface of 120m^2/m^3, inlet and outlet system of wastewater and relevant seals that guarantee a perfect tightness;
- 1 "air blown percolating filter" biological purification system constructed with a corrugated container for greater underground resistance and made of 100% recyclable polyethylene with rotational moulding technology. The anaerobic percolating filter biological treatment plants come complete with walkable inspection manhole and are suitable for the insertion of extensions, compressor, non-clogging tubular diffuser, random fill media in polypropylene with a specific surface of 120m^2/m^3, inlet and outlet system of wastewater and relevant seals that guarantee a perfect tightness.
- 1 compressor for the recirculation of sludge to the anaerobic percolator upstream and relative piping for recirculation.

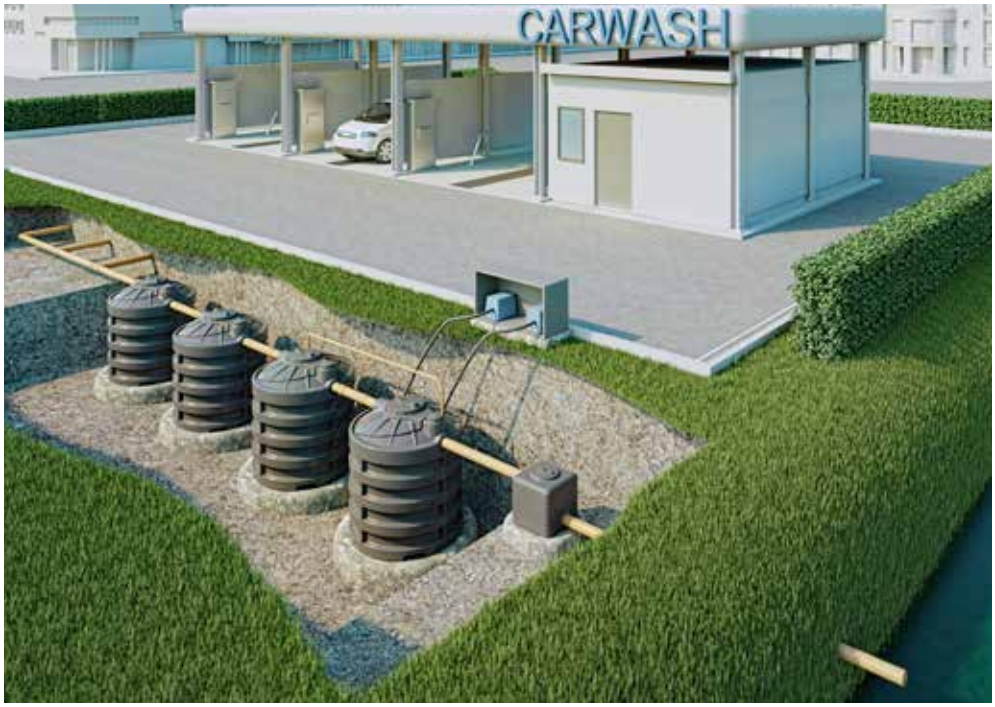

Figure 13
Complete car wash systems with drainage into surface water

WASH T4

CAR WASH PLANTS FOR DRAIN INTO THE GROUND OR REUSE

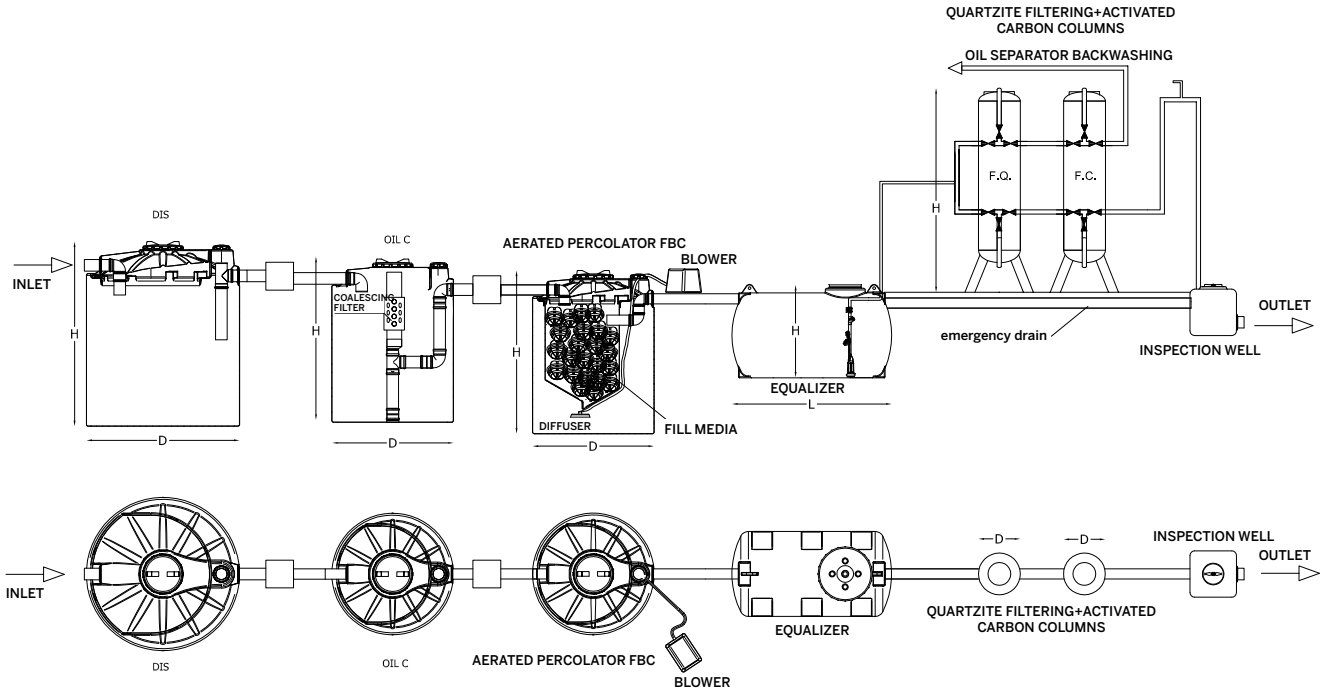

Not for drinking water

Model for underground only

Handling by forklift

Reference Standards
Legislative Decree N ° 152/2006

WARRANTY: 2 YEARS

MODEL	CODE	CAR/ D	DAILY FLOW	PEAK FLOW	EQUALIZER	FILTER MODELS	Notes
		NO.	l/g	l/h	litres		
WASH T4 10	A5Y0010	0-10	2000	200	CHU 1000		
WASH T4 20	A5Y0020	11-20	4000	400	CHU 1000		
WASH T4 30	A5Y0030	21-30	6000	600	CHU 1000	ECOFIL 1	
WASH T4 40	A5Y0040	31-40	8000	800	CHU 1000		
WASH T4 50	A5Y0050	41-50	10000	1000	CHU 2000		
WASH T4 60	A5Y0060	51-60	12000	1200	CHU 2000		
WASH T4 80	A5Y0080	61-80	16000	1600	CU 3000	ECOFIL 2	
WASH T4 100	A5Y0100	81-100	20000	2000	CU 3000		

Use
Treatment system for car washing equipment characterized by the presence of pollutants such as suspended solids, oils, hydrocarbons and detergents, suitable for drain in the limits of Tab. 4 Legislative Decree 152/06, Annex 5, final drainage alternatively, reuse.

Operation
The wastewater from manual car washing is conveyed to the sedimentation tank where all those substances that are heavier than water are removed. In the same stage lighter substances like oils, fats and foams are eliminated
The second stage consists of separating the oils and hydrocarbons, by the inclusion of a coalescing filter, they undergo a further reduction thus separating from the effluent.
The third phase consists of an aerated percolating filter where thanks to the presence of aerobic type biofilm the organic matter (BOD and COD) and surfactants are removed.
The wastewater will be subsequently sent via equalization tank with sand filter system (quartzite) and an activated carbon filter where the wastewater will undergo further refinement.

Maintenance
Sedimentation tank/grease trap maintenance
You are advised to check every two months the amount of sludge in the sedimentation tank/grease trap and if necessary remove it.
Grease separator maintenance
Every two months check the volume of separated oils and hydrocarbons and remove them at least every six months.
Remove and clean the coalescing filter at least every six months.
Maintenance of the air blown percolating filter
Verify that the blower works properly, that is, movement must be observed in the volume of oxidation coinciding with the operating time.
Every six months carry out the removal of excess sludge. Such removal must be carried out by a specialized company.

Specification Item
A biological purification system for water coming from car washing equipment drained into the ground.
The water treatment system from the car washes in question is composed of:
1 sedimentation tank/grease trap constructed with a corrugated container for greater underground resistance and made of 100% recyclable polyethylene with rotational moulding technology. The sand traps are complete with walkable inspection manhole and suitable for the insertion of extensions, inlet and outlet system of wastewater and relative gaskets that guarantee perfect tightness;
1 grease separator/sand trap with coalescing filter suitable to separate by gravity the non-emulsified oil/hydrocarbons lighter than 0.85 g/cm^3 from the wastewater drained through static separation and coalescing filtration with efficiency increased by 95%. The grease separators/sand traps are constructed with a corrugated container for underground resistance and complete with walkable ribbed maintenance lid both made of 100% recyclable polyethylene with rotational moulding technology.
The grease separators/sand traps are complete with walkable inspection manhole and suitable for the insertion of extensions, a coalescing filter with its stainless steel grid filter which is easily removable for cleaning operations, inlet and outlet system of wastewater and related seal, which ensure the perfect tightness;
1 "air blown percolator filter" biological purification system constructed with a corrugated container for greater underground resistance and made of 100% recyclable polyethylene with rotational moulding technology. The anaerobic percolating filter biological treatment plants come complete with walkable inspection manhole and are suitable for the insertion of extensions, compressor, non-clogging tubular diffuser, random fill media in polypropylene with a specific surface of 120m^2/m^3, inlet and outlet system of wastewater and relevant seals that guarantee a perfect tightness.
2 quartzite and activated carbon filters with a metal framework (carbon steel) equipped with appropriate manhole, which allow the replacement of filtering materials. The systems are powered by equalizing tank (complete with submersible pump) made of 100% recyclable polyethylene and complete with walkable inspection manhole suitable for inserting extensions. The tank is equipped with an inlet and outlet wastewater system and relative gaskets that guarantee perfect tightness.

DATA SHEET
FOR CAR WASH PLANTS

COMPANY

FULL NAME

ADDRESS NO

TOWN ZIP COUNTY

TEL. FAX E-MAIL

ANY NOTES

NOTE EVENTUALI

.....

.....

TYPE OF CAR WASH

☐ MANUAL OR PORTAL (150 lt/car)

☐ SELF SERVICE (50 L/car)

☐ TUNNEL (200 LT/car)

No. of cars/h.....

Peak flow of the plant .....

TREATMENT TYPE

FINAL DRAINAGE

☐ IN SURFACE WATER IN

☐ SEWER

PROJECT TYPE

☐ NEW PLANT

☐ MODIFICATION OF EXISTING PLANT

In the case of existing plant, attach
a brief description indicating the main relevant parameters
(type of system, efficiency, project size, utilities)

LEVEL DIFFERENCE BETWEEN THE EXIT PIPE OF THE ENTRY POINT OF THE PLANT AND THE LEVEL OF THE COUNTRYSIDE
cm .....

DIAMETER OF OUTLET PIPE IN THE INLET POINT IN THE PLANT cm .....

LEVEL DIFFERENCE BETWEEN THE POINT OF ENTRY IN THE RECEIVING BODY AND THE LEVEL OF THE COUNTRYSIDE
cm .....

ANY ATTACHMENTS

☐ PLANS (even outlined) ☐ ANALYSIS

N.B.: THE EQUIPMENT UPSTREAM AND DOWNSTREAM OF THE PLANT IS NOT OUR RESPONSIBILITY

RETURN THE FORM COUNTERSIGNED FOR CONFIRMATION OF PROJECT DATA DISCLOSED, BY, WHICH WE WILL DEVELOP OUR PURIFYING PROPOSAL, MAKING ANY ADJUSTMENTS AND/OR CORRECTIONS.
SEND FORM TO: aquapura@elbi.it / Fax 049.8841610

DATE ..... STAMP AND SIGNATURE .....

NOTES

TECHNICAL INFORMATION

ADVANTAGES OF THE PLASTO LINE

RECYCLABILITY
The tanks are made of 100% recyclable polyethylene, respecting the environment;

DURABILITY
The raw materials used are top quality, so they are reliable in the field of corrosion and oxidation; moreover, being resistant to the effect of U.V. rays, they do not favour the formation of algae;

SOLIDITY
The rotational moulding process ensures a Monolithic structure, of the product free of seams, welds or other weak points. The Elbi polyethylene tanks are manufactured in suitable thickness to withstand shocks, their solidity makes them suitable for underground use (only models declared for underground use), and are not subject to significant deformation and deterioration over time.

VERSATILITY
It is possible to have openings and inserts to even meet installation requirements not originally planned. The raw material used for manufacturing can support sudden temperature changes from -50° to +60°C;

LIGHTNESS
The plastic materials uses allow the product to be lightweight, easy to handle and easy to install;

CONVENIENCE
Elbi polyethylene tanks are more economical than their metallic cement or fiberglass counterparts, and ensure a longer life and reliability.

FOOD-SAFETY
RETENTION tanks have certified suitability for containing liquid food and the non-toxicity of LLDPE;

WARRANTY CONDITIONS FOR THE PLASTO LINE

If installed according to the ELBI installation standards, the polyethylene tanks are guaranteed against the formation of any type of algae growth. The warranty is valid for 2 years against manufacturing defects and any deterioration not attributable to external causes. The warranty runs from the delivery date on the accompanying bill of lading.
The warranty excludes:

- installation fees;
- damages for non-use;
- damage to third parties;
- damages caused by leaking contents;
- transport costs;
- any use with liquids that do not conform to the resistance table of the tanks;
- any use with liquids other than drinking water or rainwater for rainwater recovery tanks

IMPORTANT NOTES:
Ensure an adequate drainage system to avoid flooding in the event of a rupture or leaking from the tank. For storage of chemicals, see the table of tank chemical resistance to some fluids and reagents. Elbi guarantees the resistance of PLASTO tanks to liquids declared suitable (R) in the table of tank resistance. Maintaining the characteristics of the liquids contained inside tanks should be checked by and are the responsibility of the user.

GENERAL INFORMATION ON PLASTO TANKS
For storage of chemicals, see the table of tank chemical resistance to some fluids and reagents. ELBI guarantees the resistance of PLASTO tanks to liquids declared suitable (R) in the table of tank resistance. Maintaining the characteristics of the liquids contained inside tanks should be checked by and is the responsibility of the user.

INSTALLATION IN SERIES:
Keep an adequate distance (min. 20-25 cm) between the tanks to enable them to dilate freely during the filling phase.

INSTALLATION AND MAINTENANCE NOTES FOR THE PLASTO LINE

- Firstly, check the integrity of the tank and the seal on the joints; send notification of any defects found.
- During the unloading and movement phases, pay attention not to bump the tank with hard or sharp parts.
- Movement must only be carried out with the tank completely empty; it is strictly forbidden to lift the tank using the inlet or outlet pipes.
- Position the tank on a perfectly flat and levelled structure without any roughness, and resistant to the weight of the full tank.
- Before installation, ensure no heat source is placed near the tank.
- It is forbidden to build parts in masonry work that prejudices any maintenance or replacement of the tank itself.
- Ensure an adequate drainage system to avoid flooding in the event of a rupture or leaking from the tank.
- When necessary, loosen the locking pads from the coupling concerned (tanks without holes).
- Ensure you blind the overflow hole (taking care not to block its regular functioning) to avoid light passage that would enable the formation of algae and microorganisms.
- Regularly clean inside the tank, as planned by current legislation in force.
- Plasto tanks are created with special resins that guarantee resistance to U.V. rays; therefore, if installed as state-of-the-art, even if exposed to sun rays, the Plasto tanks are not subject to algae formation.
- If the tanks are underground (*) as first water tanks, ensure the overflow pipe can freely flow, is linear and is as short as possible.
- Elbi reserves the right to supply water seals only. If different liquids are being used, the customer should personally install suitable seals for the type of liquid contained in the tank.

(*) Tanks for underground only.

GENERAL WARNINGS AND CAUTIONS FOR HANDLING AND UNDERGROUND PLACEMENT OF MODULAR TANKS

A. In the execution of all operations, the Legislative Decree 81/08 and subsequent modifications regarding the safety of temporary and mobile building sites must be observed.

B. First, verify the integrity of the product and the tightness of joints and seals; signal the possible presence of defects. Verify if the material corresponds to the order and to project data.

C. Verify that the modular tank is accompanied by all standard documentation (technical data sheets, underground installation instructions, etc...), the internal components and when provided the electrical control panel. Copies of the documentation may be requested by sending an email to: marketing@elbi.it

D. Ensure that all items not in polyethylene are appropriate for the fluid that will be inserted.

E. Use lifting/transport suitable for the capacity, and in compliance with current safety standards.

F. Avoid impacts and contact with sharp or sharp-edged objects that could damage the product.

G. Do not drag or haul the tank on the floor; the bottom could be damaged.

H. Move the tanks only when completely empty using the appropriate lifting eyes; never lift the tank by the inlet and/or outlet pipes.

I. In case of tank complete with pump check that it is properly secured; communicate any defects;

J. Use flexible piping in the connections to the water supply to avoid any stress in the loading and unloading of the tank;

K. Verify that your project data communicated in your quote request (prevalence, capacity, etc.) have not changed. Otherwise, immediately contact the Technical Office.

L. For the choice of backfill material and compaction methods, refer to European Standards ENV 1046 and UNI EN 1610.

M. Mark the area with appropriate signs during handling

RESTRICTIONS

A. It is absolutely forbidden to use the underground tank for outdoor use.

B. It is strictly forbidden to use the tank to store liquids which do not comply with the tank resistance chart

C. The underground tank DOES NOT conform and CANNOT be used for storing diesel fuel.

IMPORTANT

If you wish to use the tank above ground without it being declared fit to do so, the guarantee becomes invalid.

HANDLING MODULAR TANKS

A. When installing a pump, it is mandatory to connect a pipe to the arrangement, adequately design for use in the open air, for the de-aeration of the pump on the tank..

B. To handle the product use lifting/transport suitable for the capacity, and in compliance with current safety standards.

C. During transportation, avoid movements that may damage the tank.

D. Lift the tank only if completely empty.

E. Do not remain in the workspace during handling operations

F. For lifting modular tanks use suitable ropes or straps resistant to the load to be supported. Place the lifting ropes or straps in the lifting eyes on the top part of the modular tanks. To avoid imbalance of load, always place them symmetrically as shown below, matching the angle-tail pull, which must not be less than 45°.

DIMENSIONAL TABLE OF MODULAR MU-TANKS

ARTICLE	CODE	H	LENGTH	WIDTH	WEIGHT
		mm	mm	mm	kg
MU-15000	A630015	2200	5370	2100	≈ 500
MU-20000	A630020	2200	7000	2100	≈ 700
MU-25000	A630025	2200	8650	2100	≈ 800
MU-30000	A630030	2200	10250	2100	≈ 1000
MU-35000	A630035	2200	11900	2100	≈ 1200
MU-40000	A630040	2200	13500	2100	≈ 1400

Up to 25,000 liters

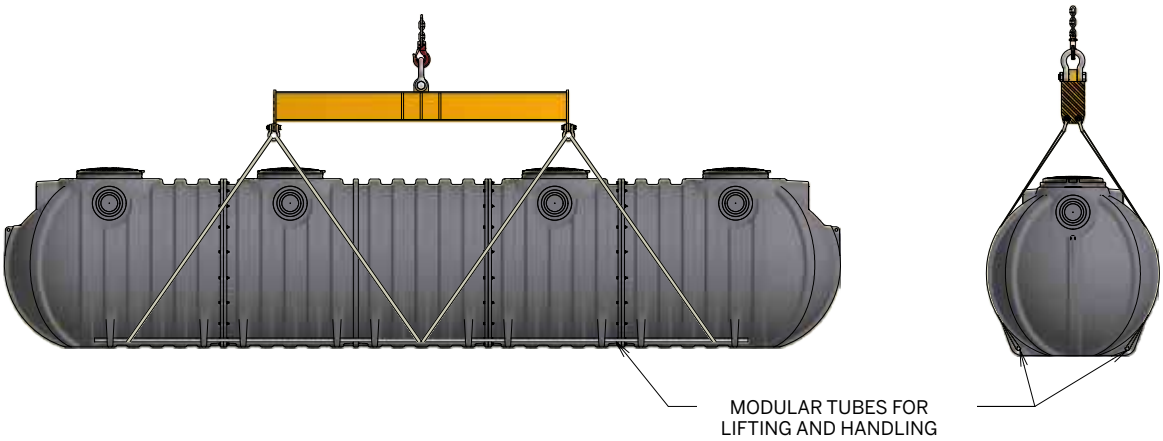

Up to 40,000 litres

INSTRUCTIONS FOR CORRECT UNDERGROUND PLACEMENT OF ALL PLASTO UNDERGROUND TANKS

Material index of backfill and/or landfill

SOIL

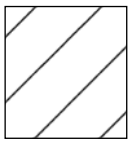

SAND

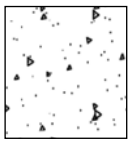

CONCRETE

GRAVEL

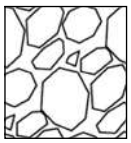

SOIL CLAY

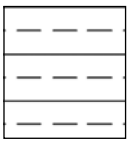

For the choice of backfill material and compaction methods, refer to European Standards ENV 1046 and UNI EN 1610.

REQUIREMENTS

Verify and make a preliminary evaluation of the hydrogeological and morphological characteristics of the soil for the compatibility to lay underground the tank.
If, during the excavation, the aquifer is higher than the bottom of the tank, it is necessary to provide a suitable insulation.
The tank must not be buried in sloping areas, and the surrounding land must not generate unbalanced lateral forces.
The maximum depth of the excavation must not exceed 80 cm.

1. PREPARATION OF THE EXCAVATION

Prepare an adequately sized pit, so that a space of at least 30 cm is left around the tank (in the presence of clay soil, the distance must be at least 50 cm). The excavation site must be dug at least 1 m from any buildings. Lay on the bottom of the pit a layer of sand of at least 15 cm so that the tank rests on a flat and uniform base without any roughness. Proceed with the position of the tank, which must be completely empty.

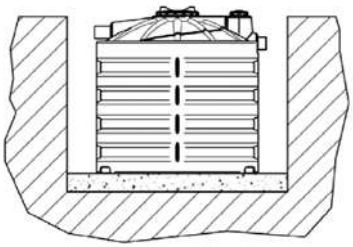

2. STANDARD BUILDING AND FILLING

Proceed to fill the excavation site in subsequent layers of 15 – 20 cm at a time, filling the tank firstly with water and then the pit with compacted sand. Comply with the diagram sequence: 1 Water – 2 Sand – 3 Water – 4 Sand etc.

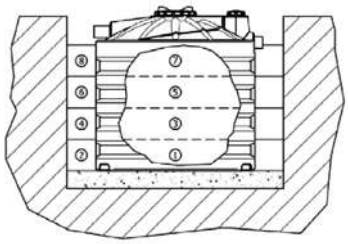

2.1 Extension installation

If the tank is buried at a depth of 40 cm, notwithstanding the walkability of the site, we suggest installing the Elbi extension in polyethylene directly on the inspection holes.

2.2 Installation of the pump

When installing a pump both external and internal, make sure that the hole for the open-air vent is free and sized for the pump installed (otherwise the tank will go into depression during operation). Bring the vent pipe over the highest point of the building or however far from the home to avoid the formation of bad odours. Connect and test the connections.

2.3 Construction of wells

For the installation of wells or manholes weighing more than 50 kg, a concrete slab should be produced, so the weight is distributed on the whole tank. It is forbidden to build parts in masonry work that prejudices any maintenance and possible replacement of the tank itself.

3. STANDARD LAYING UNDERGROUND

Having filled the tank with water and supported it with sand, cover the tank with topsoil, leaving the inspection openings free. With the underground laying method, the area becomes walkable, and passage of the vehicles is forbidden at a distance of less than 2 m from the excavation site.

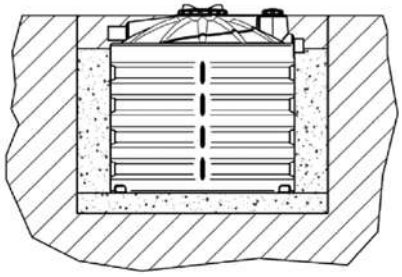

VENT

Bring the vent pipe over the highest point of the building or however far from the home to avoid the formation of bad odours.

4. LAYING WITH CLAY SOIL

Prepare an adequately sized pit, so that a space of at least 50 cm is left around the tank.
Lay on the bottom of the pit a layer of gravel (diameter of gravel about 10 mm) of at least 15 cm so that the tank rests on a flat and uniform base without any roughness. Proceed with the position of the tank, which must be completely empty. Fill the excavation site with subsequent layers of 15 – 20 cm at a time. Fill the tank firstly with water and then the pit with gravel (diameter of circa 20-30 mm); for this phase comply with the procedure in point 2 with layer filling. You are advised to install a drainage system on the bottom of the excavation site.

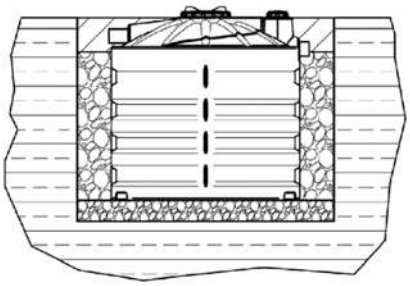

VENT

Bring the vent pipe over the highest point of the building or however far from the home to avoid the formation of bad odours.

INSTRUCTIONS FOR CORRECT UNDERGROUND PLACEMENT OF ALL PLASTO UNDERGROUND TANKS

5. BURIAL IN SURFACE WATER AREAS

The presence of surface water represents a critical situation; we recommend that you consult a specialized professional for a geomorphological report on the land. According to this the intensity of the thrust of the ground will be defined, and the backfill and the slab will be re-dimensioned. If, during the excavation, the aquifer is higher than the bottom of the tank, it is necessary to provide a suitable insulation.
The resistance to ground forces can be increased by inserting electro welded meshes. Produce the concrete slab on the bottom of the excavation site and spread a bed of washed gravel 2/6 of 10 cm to fill the corrugations on the base of the tank. Filling and backfilling should take place gradually, so it is best to half fill the tank, backfilling simultaneously with concrete and leave it to set for 24/36 hours. Then finish the filling and backfilling.

6. BURIAL NEAR A SLOPE

When burying is done in the vicinity of an altitude or slope, you should consult a specialized professional for a geomorphological report on the land. According to this, the reinforced concrete wall will be sized, which will confine the tank to balance the pressure of the soil and protect the surrounding area from any losses.

7. LAYING UNDERGROUND – LIGHT DRIVEWAY

By **LIGHTWEIGHT DRIVEWAY**, we intend a **maximum weight** applied **of 12.5 tons (Class B125 according to EN 124/95).**
So that ELBI tanks for underground can be installed in driveway zones according to class B125, you must build a **self-supporting slab** in reinforced cement. The slab should be bigger than the excavation site to avoid the weight overloading on the tank. Furthermore, between the slab and the tank, there must be at least 10 cm of air.
You are advised to build a concrete slab also under the tank, and then to lay a 10 cm bed of sand. A qualified professional should size the slabs.
As for the laying of the underground tank, refer to the previously described points 1, 2 and 3.

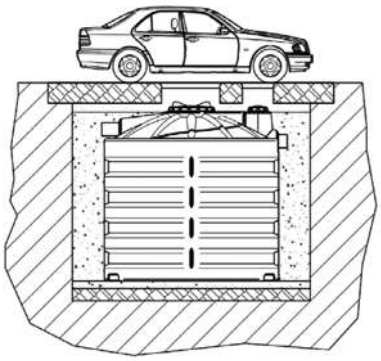

8. LAYING UNDERGROUND – HEAVY DRIVEWAY

By **HEAVY DRIVEWAY**, we intend a **maximum weight** applied **of 40.0 tons** (Class B400 according to EN 124/95).
So that ELBI tanks for underground can be installed in driveway zones according to class B400, you must build a **reinforced concrete formwork** and a **self-supporting slab** in reinforced cement. The slab should be bigger than the excavation site in order to avoid the weight overloading on the tank, and make sure that the weight discharges on the formwork. Furthermore, between the slab and the tank, there must be at least 10 cm of air. You are advised to lay under the tank a 10 cm bed of sand. A qualified professional should size both the formwork and the slab.
As for the laying of the underground tank, refer to the previously described points 1, 2 and 3.

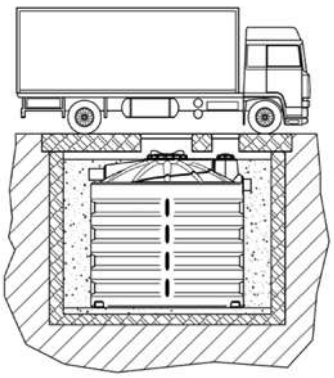

INSTRUCTIONS FOR INSTALLATION OF POLYETHYLENE TANKS IN SERIES

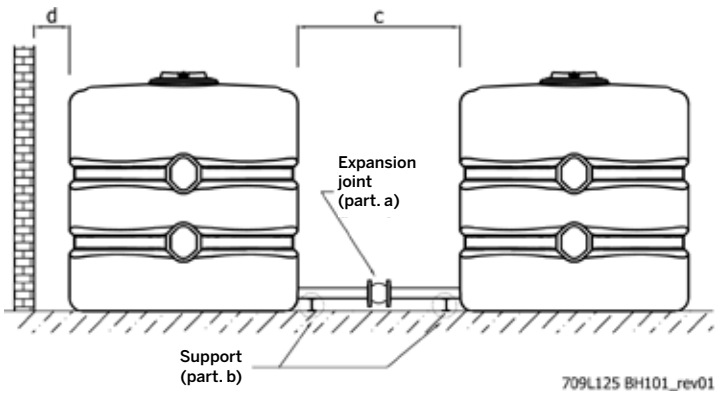

Example of installation

1. Connect the tanks only with flexible piping;
2. Install an expansion joint (detail a) on the connection pipes;
3. Plan supports (detail b) for the piping;
4. If joints, shut-off valves, etc. are installed, they must not constrain the piping;
5. Install the tanks keeping an adequate distance (dimension c) to enable free dilation during their filling phase;
6. If the tanks are installed near a wall structure, keep an adequate distance (dimension d) to enable free dilation of the tank during the filling phase.

PLANT SOLUTIONS IN RELATION TO THE FINAL WASTEWATER DRAINAGE

SYSTEM COMPOSITION							FINAL
GREASE TRAP	–	IMHOFF TANK [a]					PUBLIC SEWER Table 3
GREASE TRAP	–	DUAL CHAMBER SEPTIC TANK [a]					
GREASE TRAP	–	THREE CHAMBER SEPTIC TANK [a]					
GREASE TRAP	–	TANK [a]	–	PERCOLATING FILTER	–	FLUSH TANK	SUB-IRRIGATION (e) Table 3
GREASE TRAP	–	TANK [a]	–	FILTER [b]	–	SECONDARY SEPTIC TANK [c]	
GREASE TRAP	–	TANK [a]	–	SLUDGE TREATMENT PLANT			
GREASE TRAP	–	TANK [a]	–	PHYTODEPURATION [d]			
GREASE TRAP	–	TREATMENT PLANT					
GREASE TRAP	–	IMHOFF TANK [a]	–	SECONDARY TREATMENT [g]			DRAIN ON THE GROUND [f] Table 4
GREASE TRAP	–	IMHOFF TANK [a])	–	DRIVEN SECONDARY TREATMENT			IRRIGATION [h] Table 4
GREASE TRAP	–	TANK [a]	–	FILTER			WATER COURSE [f] Table 3
GREASE TRAP	–	TANK [a]	–	FILTER [b]	–	TANK [c]	
GREASE TRAP	–	TANK [a]	–	SLUDGE TREATMENT PLANT			
GREASE TRAP	–	TANK [a]	–	PHYTODEPURATION [d]			
GREASE TRAP	–	TREATMENT PLANT					

Notes:
a) Legislative Decree 152/2006 provides for the use of Imhoff biological type tanks for the primary treatment of black water. The installation of septic tanks is only allowed in case of replacement within existing plants. In any case, you should consult the local governments that, in certain cases, provide even the installation of septic tanks, dual-chamber with three chamber septic tanks.
b) The outlet of the aerobic percolating filter is fitted on the bottom of the tank. In the case of no slope to allow washing off the filter, it is recommended to uplift the sewage liquid to force its drainage.
c) The outlet of the aerobic percolating filters is fitted on the bottom of the tanks. Solid particles flow away spontaneously. It is recommended to install the aerobic percolating filters and additional septic tank after to avoid that solid particles contaminate the environment. In the case of drainage directly on the soil, the secondary septic tank must also be installed after anaerobic filters.
d) When phytodepuration is carried out after degreaser and Imhoff tanks, an absorption area of 3 m2/P.E. is required. In the case of phytodepuration as refining tertiary system an absorption area of 1 m2/P.E. is required.
e) In the case of sub-irrigation drain, ELBI advice for installation of a secondary treatment (with percolating filter or activated sludge system) to avoid bad odours and potential stoppage of seepage of the irrigation pipes.
f) According to Legislative Decree 152/2006, a stream must guarantee at least 120 days p/year of water flow. If this flow is not ensured, the final outlet has to be considered as wastewater on the soil.
g) For secondary treatment systems, please contact the technical office of ELBI S.p.A.
h) For a system with final destination as irrigation, please contact the technical office of ELBI S.p.A.

NOTE: Before installation, always contact the local responsible for obtaining the necessary permits for the dumping of the waste.

POPULATION EQUIVALENT (P.E.): DEFINITION

By population equivalent (P.E.), or specific organic load, we define the quantity of organic biodegradable substances derived from a residential consumer or assimilable to this, conveyed into the sewer in one day (24 hours), which corresponds to a Biochemical Oxygen Demand within 5 days (BOD_5), equal to 60 grams of O2 per day (Legislative Decree 152/06 Art.74-Definitions).

Domestic wastewater is composed of:

HYDRAULIC LOAD: quantity of water in drainage wastewater;
ORGANIC LOAD: quantity of organic substances contained in the sludge (mainly protein, carbohydrates and fat).
The **ORGANIC LOAD** is measured indirectly in BOD_5 (Biochemical Oxygen Demand):
The BOD_5 is a measurement of the quantity of oxygen (O2) necessary so that bacteria can make the organic substances harmless within 5 days.
The unit of measurement of the BOD_5 is, therefore, $gBOD_5$ /day (grams of BOD_5 per day = grams of O2 per day).

Example:
1 P.E. BOD_5 = 1 x 60 g/(resident x day) di O2 = 60 g/day of O2
5 A.E. BOD_5 = 5x60 g/(resident x day) di O2 = 300 g/day of O2

SUGGESTIONS TO CALCULATE THE POPULATION EQUIVALENT

The table below shows the coefficients to be used, according to the type of utility, to determine the number of P.E. (Population Equivalent) and therefore to select the most suitable product.

Type of Utility	no. of ...	Multiplication Coefficient	P.E.
Residential (1)	residents	1.00	
	m^2 residence	0.03	
	m^3 residence	0.01	
Hotels, Holiday Farms, Rest Homes, Campsites (2)	Beds	0.50	
	Staff	0.33	
Restaurants, Canteens, Inns (2)	Place	0.33	
	Settings	0.33	
Cinemas, Theatres, Museums (2)	Places	0.03	
	Workers	0.33	
Bars, Associations, Clubs (2)	Customers	0.14	
	Staff	0.33	
Hospitals, Clinics (2)	Beds	0.50	
	Staff	0.33	
Schools	Pupils	0.10	
Gyms	Members	0.10	
Offices, Shops, Shopping Centres	Employees	0.33	
Companies that do not produce waste water in production	Employees	0.50	
Barracks, Prisons	Beds	1.50	
Service stations, Auto grills	Cars	0.16	

(1) to determine the number of P.E. choose the greater among the three results
(2) to determine the number of P.E. add the two results

TABLE OF TANK CHEMICAL RESISTANCE TO SOME FLUIDS AND REAGENTS

PRODUCT	°C	
	23°	60°
Acetic acid (10%)	R	R
Acetic acid (50%)	R	LR
Acetic aldehyde	LR	NR
Acetic anhydride	NR	NR
Air	R	R
Alcohol butilico	R	R
Alcohol from coconut oil	R	R
Alcool amilico	R	R
Alum (all types)	R	R
Aluminium chloride (all conc.)	R	R
Aluminium fluoride (all conc.)	R	R
Aluminium sulphate (all conc.)	R	R
Amm. persulphate (sat. sol.)	R	R
Ammonia (100% gas)	R	R
Ammonium carbonate	R	R
Ammonium chloride (sat. sol.)	R	R
Ammonium fluoride (sat. sol.)	R	R
Ammonium hydrate (10%)	R	R
Ammonium hydrate (30%)	R	R
Ammonium nitrate (sat. sol.)	R	R
Ammonium sulphate (sat. sol.)	R	R
Amyl acetate	NR	NR
Amyl chloride	NR	NR
Aniline	NR	NR
Aqua-regia	NR	NR
Aromatic hydrocarbons	NR	NR
Arsenic acid (all conc.)	R	R
Ascorbic acid (10%)	R	R
Barium carbonate (sat. sol.)	R	R
Barium chloride (sat. sol.)	R	R
Barium hydrate	R	R
Barium sulphate (sat. sol.)	R	R
Barium sulphide (sat. sol.)	R	R
Beer	R	R
Benzene	NR	NR
Benzoic acid (all conc.)	R	R
Bismuth carbonate (sat. sol.)	R	R
Borax	R	R
Boric acid (all conc.)	R	R
Boron tetrafluoride	R	R
Brine	R	R
Bromium (liquid)	NR	NR
Butanediol (10 %)	R	R
Butanediol (100%)	R	R
Butanediol (50%)	R	R
Butyl acetate	NR	NR
Butyric acid (all conc.)	NR	NR
Calcium carbonate (sat. sol.)	R	R
Calcium chlorate (sat. sol.)	R	R
Calcium chloride (sat. sol.)	R	R
Calcium disulphite	R	R
Calcium hydrate (all conc.)	R	R
Calcium nitrate (50%)	R	R
Calcium oxide (sat. sol.)	R	R
Calcium sulphate	R	R
Camphor oil	LR	NR
Carbon dioxide	R	R
Carbon oxide (all conc.)	R	R
Carbon sulphide	NR	NR
Carbon tetrachloride	LR	NR
Carbonic acid	R	R
Castor oil (all conc.)	R	R
Chlorine (100% dry gas)	LR	NR
Chlorine water (sat. sol. 2%)	R	R
Chlorobenzene	NR	NR

PRODUCT	°C	
	23°	60°
Chloroform	LR	NR
Chlorosulphonic acid (100%)	NR	NR
Cider	R	R
Citric acid (sat.)	R	R
Coffee	R	R
Cola concentrates	R	R
Copper chloride (sat.)	R	R
Copper cyanide (sat.)	R	R
Copper fluoride (2%)	R	R
Copper nitrate (sat.)	R	R
Copper sulphate (sat.)	R	R
Corn oil	R	R
Cotton oil	R	R
Dextrin	R	R
Dextrose	R	R
Dextrose (sat. water sol.)	R	R
Diazonium salts	R	R
Dibutyl phthalate	LR	LR
Dichlorobenzene (ortho and para)	NR	NR
Diesel for domestic use	LR	LR
Diesel for motor vehicles	LR	LR
Diethyl chetone	LR	LR
Diethylene glycol	R	R
Diglycolic acid	R	R
Dimethylamine	NR	NR
Disodium phosphate	R	R
Emulsifiers for photography	R	R
Ethane dichloride	NR	NR
Ethyl acetate	LR	NR
Ethyl alcohol	R	R
Ethyl alcohol (35%)	R	R
Ethyl benzene	NR	NR
Ethyl chloride	NR	NR
Ethyl ether	NR	NR
Ethylene glycol	R	R
Ethylene trichloride	NR	NR
Fluoboric acid	R	R
Fluosilicic acid	R	LR
Fluosilicic acid (30%)	R	R
Formic acid (all conc.)	R	R
Fructose	R	R
Fruit pulp	R	R
Furfurolo	NR	NR
Furfuryl alcohol	LR	LR
Gallic acid	R	R
Glucose	R	R
Glycerol	R	R
Glycol	R	R
Glycolic acid	R	R
Hexachlorobenzene	R	R
Hexanol (commercial)	R	R
Hydrochloric acid (all conc.)	R	R
Hydrochloric acid (dry gas)	R	R
Hydrocyanic acid	R	R
Hydrogen	R	R
Hydrogen bromide (50%)	R	R
Hydrogen fluoride (40%)	R	R
Hydrogen fluoride (60%)	R	R
Hydrogen sulphide	R	R
Hydroquinone	R	R
Hypochlorous acid	R	R
Ink	R	R
Iodine (sol. in KJ)	LR	NR
Iron chloride (ico)	R	R
Iron chloride (oso)	R	R

PRODUCT	°C	
	23°	60°
Iron nitrate (ico)	R	R
Iron sulphate (oso)	R	R
Lead acetate	R	R
Lead nitrate	R	R
Liquid chlorine	NR	NR
Liquids to develop photographs	R	R
Lye (10%)	R	R
Magnesium carbonate	R	R
Magnesium chloride	R	R
Magnesium hydroxide	R	R
Magnesium nitrate	R	R
Magnesium sulphate	R	R
Mercury	R	R
Methyl alcohol (100%)	R	R
Methylene chloride (100%)	LR	NR
Milk	R	R
Mineral oils	R	LR
Naphtha	LR	NR
Naphthalene	NR	NR
n-Heptane	LR	LR
Nickel chloride	R	R
Nickel nitrate	R	R
Nickel sulphate	R	R
Nicotine (diluted)	R	R
Nitric acid (30%)	R	R
Nitric acid (50%)	R	LR
Nitric acid (70%)	R	LR
Nitric acid (95%)	NR	NR
Nitrobenzene	NR	NR
n-Octane	R	R
Olive oil	R	NR
Oxalic acid	R	R
Perchloroethylene	NR	NR
Petrol	NR	NR
Potassium bicarbonate	R	R
Potassium bromide	R	R
Potassium carbonate	R	R
Potassium chlorate	R	R
Potassium chloride	R	R
Potassium chromate (40%)	R	R
Potassium cyanide	R	R
Potassium dichromate (40%)	R	R
Potassium ferrocyanide II	R	R
Potassium ferrocyanide III	R	R
Potassium fluoride	R	R
Potassium hydroxide (conc.)	R	R
Potassium nitrate	R	R
Potassium perchlorate (10%)	R	R
Potassium permanganate (20%)	R	R
Potassium persulphate	R	R
Potassium sulphate (conc.)	R	R
Potassium sulphide (conc.)	R	R
Potassium sulphite (conc.)	R	R
Propargyl alcohol	R	R
Propyl alcohol	R	R
Propylene dichloride (100%)	NR	NR
Propylene glycol	R	R
Pyridine	R	R
Resorcinol	R	R
Salicilic acid	R	R
Seawater	R	R
Selenic acid	R	R
Silver nitrate (sol.)	R	R
Soap solution (all conc.)	R	R
Sodium acetate	R	R

PRODUCT	°C	
	23°	60°
Sodium benzoate (35%)	R	R
Sodium bicarbonate	R	R
Sodium borate	R	R
Sodium bromide	R	R
Sodium carbonate	R	R
Sodium chlorate	R	R
Sodium chloride	R	R
Sodium cyanide	R	R
Sodium dichromate	R	R
Sodium disulphate	R	R
Sodium disulphite	R	R
Sodium ferrocyanide	R	R
Sodium fluoride	R	R
Sodium hydroxide	R	R
Sodium hypochlorite	R	R
Sodium nitrate	R	R
Sodium phosphate (tri)	R	R
Sodium sulphate	R	R
Sodium sulphide	R	R
Sodium sulphite	R	R
Solutions for brass plating	R	R
Solutions for cadmium plating	R	R
Solutions for copper plating	R	R
Solutions for gold plating	R	R
Solutions for lead plating	R	R
Solutions for nickel plating	R	R
Solutions for photography	R	R
Solutions for silver plating	R	R
Solutions for tin plating	R	R
Solutions for zinc plating	R	R
Starch (saturated solution)	R	R
Stearic acid	R	R
Sulphorous acid	R	R
Sulphuric acid (100%)	R	R
Sulphuric acid (50%)	R	R
Sulphuric acid (70%)	R	LR
Sulphuric acid (80%)	R	NR
Sulphuric acid (96%)	LR	NR
Sulphuric acid (98%)	LR	NR
Sulphuric acid (smoking)	NR	NR
Synthetic detergents	R	R
Tannico acid	R	R
Tetrahydrofuran	LR	NR
Tin chloride (ico)	R	R
Tin chloride (oso)	R	R
Titanium tetrachloride	NR	NR
Toluene	LR	LR
Triethylene glycol	R	R
Turpentine	LR	LR
Urea (30%)	R	R
Vanilla	R	R
Vinegar	R	R
Water	R	R
Wetting agent	R	R
Whisky	R	R
Wine	R	R
Xylene	NR	NR
Yeast	R	R
Zinc bromide	R	R
Zinc carbonate	R	R
Zinc chloride	R	R
Zinc oxide	R	R
Zinc stereate	R	R
Zinc sulphate	R	R

R = Resistant LR = Limited resistance NR = Not resistant
For information on compatibility for containment of fluids and reagents other than water, it is compulsory to ask for information and approval from the technical office. For use with liquids other than water, remember to take into consideration any differences in specific weight.
* The tanks do not have Fire Brigade certification to contain diesel/gasoline fuel.
For use with liquids and fluids other than water, comply with local standards in force for environment and safety requirements. ELBI guarantees resistance of its PLASTO tanks to liquids declared suitable (R) in the table.

Maintaining the characteristics of the liquids contained inside tanks should be checked by and are the responsibility of the user.

Standard accessories for water

- Connections:
A. with threaded holes
B. with joints: (Fig. 1)

- drainage (3/4")
- inlet (dn 1) and overflow (dn 1) in PP with ring nut and gasket;

- Hole ø 28 for float.

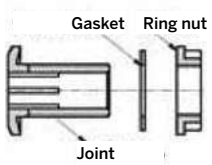

Figure 1

ACCESSORIES AND SPARE PARTS

ACCESSORIES

WATER CONNECTION KIT FOR PLASTO TANKS

Code	Connection	Notes
8200180	2x1"+3/4"	
8200190	2x 1"1/4+3/4"	
8200200	2x1"1/2+3/4"	
8200210	2x2"+3/4"	

LIDS FOR PLASTO TANKS

Code	Item	Diam. Ø	Notes
7081060 00002	Lids with vent	255	
7081070 00002	Lids with vent	355	
7081080 00002	Lids with vent	455	
7081100 00002	Lid for CU 3.000 - 5.000	500	
A5G1092 00002	Lid for CU 10.000	700	
Q220050 00002	Lid for CV 10.000 - 13.000	610	
A5G0055 00002	Lid for JAR	400	

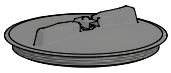

Lids with vent

Lid for CU 3.000-5.000

Lid for CU 10.000

Lid for CV 10.000-13.000

HYDRAULIC LEVEL REGULATORS WITH INSTANT "QUICKSTOP" CLOSURE

Code	Connection	Connection	Notes
8001100	PLUS Regulator	3/4"	
8001110	PLUS Regulator	1"	
8001120	PLUS Regulator	1 - 1/4"	
8001130	PLUS Regulator	1 - 1/2"	
8001100 V0010	BASIC Regulator	3/4"	
8001110 V0010	BASIC Regulator	1"	
8001120 V0010	BASIC Regulator	1 - 1/4"	
8001130 V0010	BASIC Regulator	1 - 1/2"	

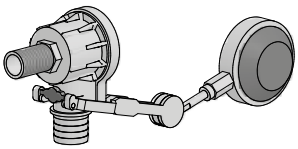

Hydraulic regulator PLUS model

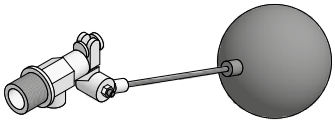

Hydraulic regulator BASIC model

EXTENSIONS AND FILTERS FOR UNDERGROUND PLASTO TANKS

Code	Model	Notes
A5G0062 00002	Extension Hatch Ø 300 for CHU 1.000	
A5G0070 00002	Extension Hatch Ø 400 for CHU 2.000	
7081200 00002	Extension Hatch Ø 500 for CU 3.000 - 5.000	
A5G0092 00002	Extension Hatch Ø 700 for CU 10.000	
L310000 00002	ELBI rainwater filter Ø 100	

Extension for CHU

Rainwater filter

Extension for CU

PROLUNGHE PER SISTEMI ACQUE REFLUE

Code	Model	Notes
A5G0150	Inspection Extension diam. 150	
A5G0200	Inspection Extension diam. 200	
A5G0300	Inspection Extension diam. 300	
A5G0400	Inspection Extension diam. 400	

ACCESSORIES / SPARE PARTS FOR WASTEWATER SYSTEMS

Code	Description	Notes
F5NS006 00002	Imhoff Sedimentation Tank-6 / Oil 6-9-12	
F5ND006 00002	Imhoff Digester-6 / ST 6 / DG-PRO 45 / OIL 6	
F5NS009 00002	Imhoff Sedimentation Tank-9	
F5ND009 00002	Imhoff Digester-9 / ST 9 / DG-PRO 60 / OIL 9	
F5NS012 00002	Imhoff Sedimentation Tank-12	
F5ND012 00002	Imhoff Digester-12 / ST 12 / DG-PRO 75 / OIL 12	
F5NS015 00002	Imhoff Sedimentation Tank-15 / Oil 15-18-25	
F5ND015 00002	Imhoff Digester-15 / ST 15 / DG-PRO 110 / OIL 15	
F5NS018 00002	Imhoff Sedimentation Tank-18	
F5ND018 00002	Imhoff Digester-18 / ST 18 / DG-PRO 140 / OIL 18	
F5NS025 00002	Imhoff Sedimentation Tank-25	
F5ND025 00002	Imhoff Digester-25 / ST 25 / DG-PRO 170 / OIL 25	
F5NS035 00002	Imhoff Sedimentation Tank-35 / Oil 35-50	
F5ND035 00002	Imhoff Digester-35 / ST 35 / DG-PRO 240 / OIL 35	
F5NS050 00002	Imhoff Sedimentation Tank-50	
F5ND050 00002	Imhoff Digester-50 / ST 50 / DG-PRO 350 / OIL 50	
F5OC012 00002	Lid ST 6-9-12 / DG-PRO 45-60-75 / OIL 6/9/12	
F5OC025 00002	Lid ST 15-18-25 / DG-PRO 110-140-170 / OIL 15/18/25	
F5OC050 00002	Lid ST 35-50 / DG-PRO 240-350 / OIL 35/50	

Sedimentation Tank

Digester

ANTI-FLOODING VALVE

Code	Description	Notes
L39V110 00002	Anti-flooding valve in pvc - diam.110	
L39V125 00002	Anti-flooding valve in pvc - diam.125	
L39V160 00002	Anti-flooding valve in pvc - diam.160	
L39V200 00002	Anti-flooding valve in pvc - diam.200	
L39V250 00002	Anti-flooding valve in pvc - diam.250	
L39V315 00002	Anti-flooding valve in pvc - diam.315	

Anti-flooding valve

GASKETS FOR PIPE CONNECTION

Code	Description	Notes
L390063 00002	Gasket diam. 63	
L390110 00002	Gasket diam. 110	
L390125 00002	Gasket diam. 125	
L390160 00002	Gasket diam. 160	
L390200 00002	Gasket diam. 200	
L390250 00002	Gasket diam. 250	
L390315 00002	Gasket diam. 315	
L390400 00002	Gasket diam. 400	

Gasket

TANKS

Code	Description	Notes
1721050	flush tank 300 litres	
1720633 00600	underground tank CBU - 300	
1720624 CL011	chlorinator tank + pipes d110	
1720624 00600	blind tanks 100 litres	
1720624 Z1111	inspection well 100 litres in/out 110	
1720624 Z1212	inspection well 100 litres in/out 125	
1720624 Z1616	inspection well 100 litres in/out 160	
L3P3060	tank 30x30 h=60 level tank inspection well	
A560059 00600	underground tank pu-750	
A560070 00600	underground tank pu-2000	

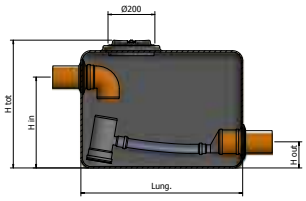

Flush tank

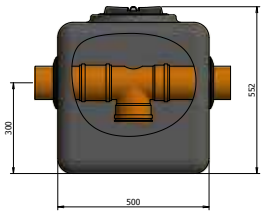

Chlorinator tank

LINEAR DIAPHRAGM BLOWERS FOR ACTIVATED SLUDGE SYSTEMS

Code	VOLTAGE	AMPERES	FREQUENCY	POWER	NOMINAL PRESSURE	CAPACITY	NOISE	Notes
	V	A	Hz	W	mbar	lt/min	dbA	
L390025 00002	220	0,60	50	64	150	70	< 48	
L390028 00002	220	1,0	50	91	150	88	< 57	
L390030 00002	220	0,96	50	106	180	100	< 50	
L390035 00002	220	0,94	50	110	200	120	< 46	
L390040 00002	220	1,20	50	170	200	150	< 48	
L390045 00002	220	1,75	50	230	200	200	< 48	
L390047 00002	220	1,8	50	200	200	250	< 55	
L390049 00002	220	2,6	50	300	200	300	< 56	

Linear diaphragm blower

FINE BUBBLE DIAPHRAGM AIR DIFFUSER

Code	FORM	CONNECTION	SIZE Ø	WEIGHT	BUBBLES Ø	CAPACITY	Notes
			mm	kg	mm	IL/min	
L390020 00002	Flat with ballast	1/2" GAS	215	2,1	1 ÷ 3	80	
L390021 00002	Tubular	3/4" PT	70 x 300	0,45	1 ÷ 3	165	
L390022 00002	Tubular	3/4" PT	70 x 600	0,90	1 ÷ 3	250	

Diaphragm air diffuser

RANDOM FILL MEDIA

Code	FORM	DIAMETER Ø	SPECIFIC SURFACE	VOIDAGE	MATERIAL	Notes
		mm	m^2 / m^3	%	mm	
L390005 00002	Spherical	70	140	95	Isotactic Polypropylene	
L390010 00002	Circular	170	120	95	Isotactic Polypropylene	

COALESCING FILTERS

Code	Description	Notes
L390019 00002	Tubular coalescing filter for oil-c	

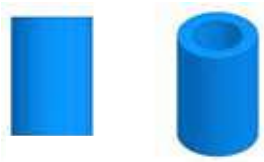

Coalescing Filter

KIT FOR SUBI SYSTEM

Code	Description	Notes
L3S0010 00002	subi kit (perforated pipe and TNT)	
L3S0000 00002	modular dispersion system for idrosac sub-irrigation plants - imhoff 500 cm x 300 cm x 2000 cm	

*per meter

PIPE CONNECTION KIT

Code	Description	Notes
L3G0110 00002	PVC pipe connection kit d.110	
L3G0125 00002	PVC pipe connection kit d.125	
L3G0160 00002	PVC pipe connection kit d.160	
L3G0200 00002	PVC pipe connection kit d.200	
L3G0250 00002	PVC pipe connection kit d.250	
L3G0315 00002	PVC pipe connection kit d.315	
L3G0400 00002	PVC pipe connection kit d.400	

ELECTRIC SUBMERSIBLE PUMP WITH FLOAT

Code	Description	Notes
L39P004 00002	Submersible pump - 0,20 kw	
L39P005 00002	Submersible pump - 0,22 kw	
L39P010 00002	stainless steel submersible pump 0,55 kw	
L39P015 00002	stainless steel submersible pump 0,60 kw	
L39P020 00002	stainless steel submersible pump 0,97 kw	

Electric pump with float

ELECTRICAL CONTROL PANELS AND ACCESSORIES

Code	Description	Notes
L39Q000 00002	electrical control panel - audible/visual alarm	
L39Q005 00002	electrical control panel for rainwater first flush systems 6b	
L39Q010 00002	electrical control panel for rainwater first flush systems 6d	
L39Q015 00002	time electrical control panel	
L39G010 00002	electric float + 10 metres of cable	

Electric control panel

RAIN SENSOR

Code	Description	Notes
L39S010 00002	level probe with two electrodes	

Level probe

BIOLOGICAL ACTIVATOR

Code	Description	Notes
L400001 00002	anaerobic systems bio activator (750 gr perforated jar)	
L400002 00002	bio activator degreasers (750 gr perforated jar)	
L400003 00002	Domovo - biodegradators of organic residues (Pack of 10 tablets of 12 grams individually wrapped)	

GENERAL TERMS AND CONDITIONS OF SALE

1. Preamble
These general conditions, unless otherwise agreed in writing, regulate all current and future sale agreements between the Parties.

2. Offers
2.1. The Buyer declares to grant and accept all measures concerning weight, surface, shape, size and, at any rate, all the technical specifications included by Elbi in its published documents.
2.2. Elbi reserves the right to make all changes without fore-notice it should arbitrarily deem necessary to enhance the product, as also to cease production of any model, excluding any right of the Buyer to demand compensation under any form.
2.3. The documentation enclosed to offers by Elbi is exclusively reserved to the Buyer, with the explicit prohibition to make it accessible, even partly, to third parties without due authorisation in writing by Elbi.

3. Orders
3.1 Every order submitted by the Customer is understood as accepted by Elbi only once it issues a Confirmation of Order.
Submitted orders are legally binding for the Customer and cannot be changed or cancelled without consent in writing (including by fax or e-mail) by Elbi or with execution of the modified order.
3.2. If the Customer drafts an order in name and on behalf of third parties from whom it has received mandate to file orders, by signing the order it agrees to fully comply with the agreed terms.
3.3. Orders received by representatives of Elbi are not binding until they are accepted in writing (including by fax) by the latter, or rather, until their formal execution.
3.4. Elbi reserves the right to cancel an order if its execution is not feasible or is unreasonably costly due to an unpredictable impediment that is independent of its will.

4. Prices
4.1.Prices are ex-works, unless otherwise agreed in writing by the parties, and are expressed in euros. VAT is not included in the prices and will be invoiced separately based on the tax rate applicable on the date of invoice.

5. Delivery
5.1. Delivery terms are purely indicative. In no case will a delivery delay entitle the Customer to request compensation and/or entail cancellation of the order.
Any right to compensation of damages is at any rate limited to the contract value.
5.2. If deliveries are delayed because of force majeure, the delivery date will be extended by the duration of the event that caused the delay.
5.3. If an established delivery date is deferred by the Customer, Elbi will be entitled to demand payment of the amount of the available goods, or rather, to further delay their delivery.

6. Shipment and transfer of risk
6.1. Procedure for shipment is decided by Elbi, unless otherwise agreed.
6.1. If packing is not included, it is invoiced at price of cost. Elbi does not accept returned packages.
6.3. For deliveries worth less than 1.000 euros (and for Sicily and Sardinia only, worth less than 1,500 euros), a surcharge of 5% will be applied, with a minimum contribution of 40.00 euros for transport expenses.
6.4. For deliveries to construction sites, a fixed contribution of 5% will be applied for transport expenses.

7. Returned goods
7.1. Goods can only be returned if Elbi grants authorisation in writing,
7.2. If the parties agree to return goods, Elbi will charge the Customer administrative fees of 30% of the invoiced amount. Elbi also reserves the right to charge further value reductions on returned goods.
7.3. Elbi will not accept goods returned 3 (three) months after their delivery.

8. Payment terms
8.1. Unless otherwise agreed in writing by the parties, payments must be made to Elbi in Limena (PD), Via Buccia 9.
8.2. All payments must be made by the due date indicated in the invoice.
8.3. The Customer cannot compensate its debt for supplied goods with any credits that Elbi has not acknowledged or has contested, and cannot suspend payments, in part or in full.
8.4. If the Customer makes a payment after the due date in invoice, Elbi will be entitled to issue a Bank Order and invoice for any arrears, which will be charged ex art. 5. of Legislative Decree no. 231/2002. The above without prejudice in any case to Elbi's right to take legal action in order to receive compensation of the greater damage. Issuance of a Bank Order entails the surcharge of stamp duty and any accessory bank fees. Interest will be due without the need to issue a formal notice of default.
8.5. Failure to comply with the payment terms applicable to a supply by the Customer will entitle Elbi to immediately demand payment of all pending amounts, with automatic expiry of the agreed term.

9. Suspension of a supply
9.1. Failure to pay an invoice or its delayed payment will entitle Elbi to suspend any pending deliveries until it receives payment of its credit.

10. Warranty
10.1. Elbi will deliver to the Customer goods compliant with the legislation applicable in Italy. The Customer agrees to accept goods that are compliant with the laws in the Country to which they are delivered and will promptly inform Elbi (at any rate prior to shipment) of any changes it wants made to the goods and/or packing.

11. Retained ownership
11.1. Upon delivery, the Customer must immediately inspect the goods.
11.2. Any claims must be submitted in writing to Elbi within 8 days from receipt of the goods or, in the event of concealed flaws, within 8 days from their discovery and by and no later than one year from their delivery. Replacement of the goods does not mean that Elbi accepts the claim.
Claims regarding quantity (no. of items) and packing conditions must be reported on the transport document upon delivery, or (if otherwise, the claim will be void) within 2 (two) business days following delivery of the goods.
11.3. Elbi agrees to solve any manufacturing flaw, poor quality standard or nonconformity of the products that are attributable to its production, and that occurred within the terms established by law from the date the Products were delivered, provided it is promptly informed thereof, in accordance with point 2 of this clause.
11.4. Except for negligence or severe misconduct, Elbi will be required (whichever it chooses) to either:
a) supply products to the Customer of the same kind and quality as those found to display flaws, or that are not compliant with agreed terms; Elbi can in such case demand, at the expense of the Customer, to have the faulty products returned, over which it will have ownership;
b) repair the flawed product at its expense or modify the product that is not compliant with the terms agreed in order;
c) refund the Customer the price paid for the non-compliant products upon their return.
The warranty herein encompasses and replaces any other warranties on flawed or non-compliant products and excludes any other liability on Elbi's part for supplied products; more specifically, the Customer cannot submit any other claim for damages, request a discount or termination of the contract. Once the warranty term is over, the Customer will not be entitled to submit any claim against Elbi.
11.5. Any repair and service performed under warranty will be subordinate to the Buyer processing payment for the goods.
11.6. The warranty is at any rate confined and limited to the exact correspondence of the supplied product to the one ordered in writing. It is the Customer's exclusive responsibility to solve any problems tied to assembly, adaptation to the intended use of the product and natural wear. The warranty moreover excludes any product part or accessory directly manufactured by the Customer or third parties.

12. Express termination clause
12.1. Goods delivered to the Customer remain property of Elbi until their invoiced price is paid in full.
12.2. For as long as Elbi retains ownership over the goods, the Buyer cannot without prior consent in writing by Elbi pawn or sell the supplied goods to third parties.

13. Safeguard clause
13.1 If any clause of these General Conditions of Sale proves ineffective or void, in part or in full, the other clauses of the Conditions will continue to be enforceable and applicable.
The contractual parties agree to replace the void or ineffective clause with another one that will ensure that the economic scope originally intended for these Conditions can be legally pursued.

14. Applicable law and Competent Court
14.1. All agreements regulated by these General Conditions of Sale are, for all matters not pertaining to Italian law, regulated by the Vienna Convention of 1980. Any dispute that may arise between the parties will be settled by the sole competent Court of Padua, all other concurring or alternative Courts excluded.

15. Correspondence
15.1. Any correspondence and/or order submitted to Elbi must be submitted to the following address (or will otherwise be void): via Buccia 9, Limena (PD) – IT;
Tel +39/049/8840677 Fax +39/049/8841610 e-mail: info@elbi.it

Pursuant to and by effect of art. 1341 of the Civil Code, the Buyer declares to have carefully read the above clauses under points 2) Offers; 3) Orders; 4) Prices; 5) Delivery; 6) Shipment and transfer of risk; 7) Returned goods; 8) Payment terms; 9) Suspension of a supply; 10) Warranty; 11) Retained ownership; 12) Express termination clause; 13) Safeguard clause; 14) Applicable law - Competent Court; 15) Correspondence.

NOTES

While the basic features of the product will remain unchanged,
the company reserves the right to make any change
to its products without the need for prior notice.

The colours shown in the catalogue and dimensions are an indication only.

It is forbidden to reproduce any part of this catalogue.

PRINT MAY 2017

COMPANY WITH
QUALITY SYSTEM
CERTIFIED BY DNV GL
= ISO 9001 =

Elbi S.p.A.
Headquartes and main plant:
C.P. 103 - Via Buccia, 9
35010 LIMENA (PD)
ITALY
Tel +39-049-8840677
Fax +39-049-8841610

Plant and warehouse in Modugno:
Via delle Magnolie, 19
70026 MODUGNO (BA)
ITALY
Tel +39-080-5316843
Fax +39-080-5316822

Elbi of America, Inc
Houston, TX 77032
Tel. 001 (713) 674-2900
Fax 001 (713) 674-2982
www.elbi.net
Brea, CA 92821
Tel. 001 (714) 674-0590

e-mail: info@elbi.it
www.elbi.it

cod. 8109163 V3000 - 05/2017